SERVICE & OPERATING MANUAL

ORIGINAL INSTRUCTIONS

E1

1" Bolted Metal – Food Processing ATEX

with Metal Center Section

E1 Food Processing Pumps

- Stainless Steel

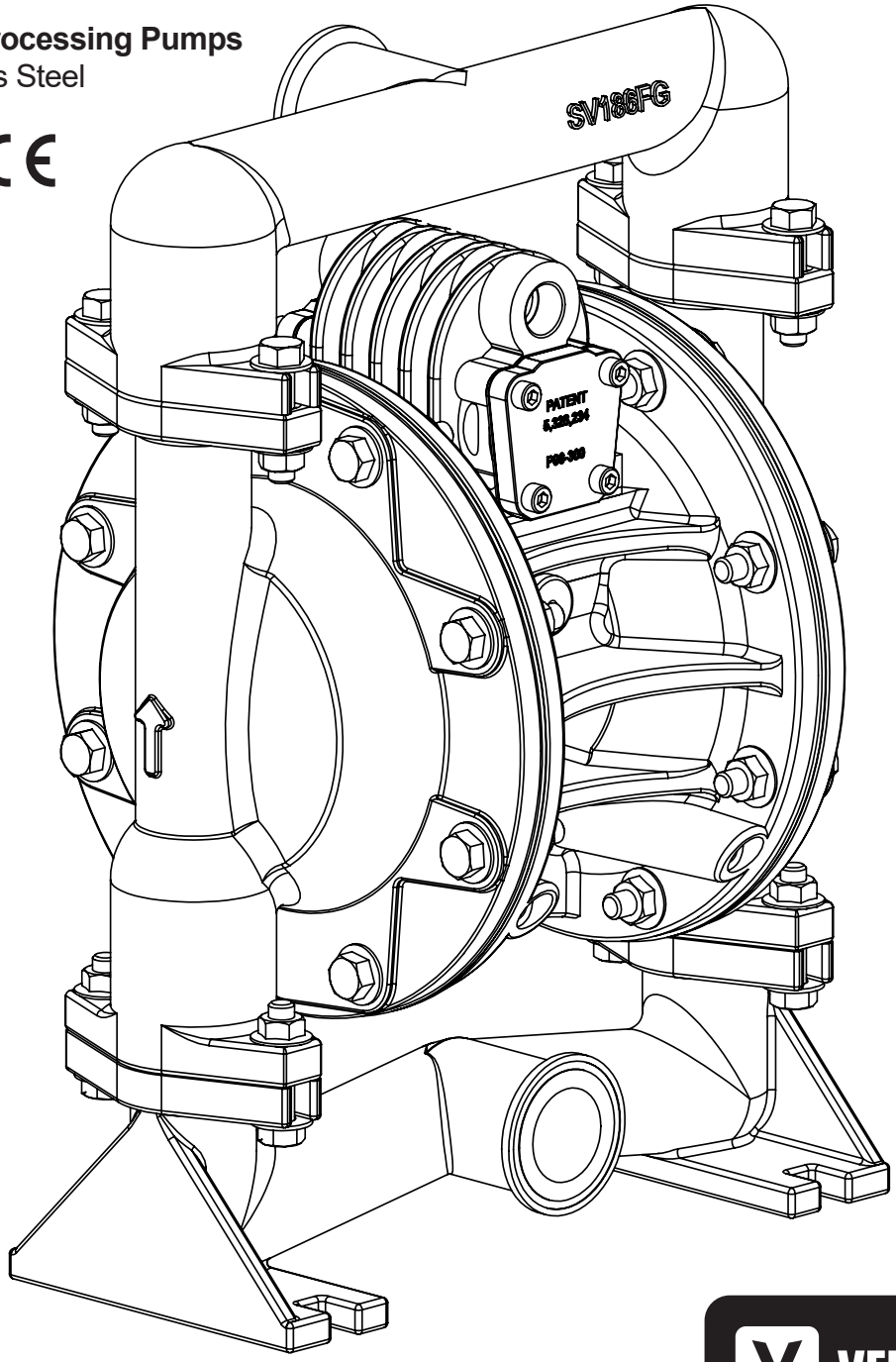

VERSAMATIC®

VERSAMATIC®
Warren Rupp, Inc. • A Unit of IDEX Corporation

800 North Main Street, Mansfield, OH 44902 USA
Phone: (419) 526-7296 • **www.versamatic.com**

© Copyright 2019
Warren Rupp, Inc. All rights reserved

Safety Information

⚠ IMPORTANT

Read the safety warnings and instructions in this manual before pump installation and start-up. Failure to comply with the recommendations stated in this manual could damage the pump and void factory warranty.

When the pump is used for materials that tend to settle out or solidify, the pump should be flushed after each use to prevent damage. In freezing temperatures the pump should be completely drained between uses.

⚠ CAUTION

Before pump operation, inspect all fasteners for loosening caused by gasket creep. Retighten loose fasteners to prevent leakage. Follow recommended torques stated in this manual.

Plastic pumps and plastic components are not UV stabilized. Ultraviolet radiation can damage these parts and negatively affect material properties. Do not expose to UV light for extended periods of time.

WARNING
Pump not designed, tested or certified to be powered by compressed natural gas. Powering the pump with natural gas will void the warranty.

WARNING
The use of non-OEM replacement parts will void (or negate) agency certifications, including CE, ATEX, CSA, 3A and EC1935 compliance (Food Contact Materials). Warren Rupp, Inc. cannot ensure nor warrant non-OEM parts to meet the stringent requirements of the certifying agencies.

⚠ WARNING

When used for toxic or aggressive fluids, the pump should always be flushed clean prior to disassembly.

Before maintenance or repair, shut off the compressed air line, bleed the pressure, and disconnect the air line from the pump. Be certain that approved eye protection and protective clothing are worn at all times. Failure to follow these recommendations may result in serious injury or death.

Airborne particles and loud noise hazards. Wear eye and ear protection.

In the event of diaphragm rupture, pumped material may enter the air end of the pump, and be discharged into the atmosphere. If pumping a product that is hazardous or toxic, the air exhaust must be piped to an appropriate area for safe containment.

Take action to prevent static sparking. Fire or explosion can result, especially when handling flammable liquids. The pump, piping, valves, containers and other miscellaneous equipment must be properly grounded.

This pump is pressurized internally with air pressure during operation. Make certain that all fasteners and piping connections are in good condition and are reinstalled properly during reassembly.

Use safe practices when lifting

ATEX Pumps - Conditions For Safe Use

1. Ambient temperature range is as specified in tables 1 & 2 on the next page

2. ATEX compliant pumps are suitable for use in explosive atmospheres when the equipment is properly grounded in accordance with local electrical codes

3. Conductive Polypropylene, conductive Acetal or conductive PVDF pumps are not to be installed in applications where the pumps may be subjected to oil, greases and hydraulic liquids.

4. When operating pumps equipped with non-conductive diaphragms that exceed the maximum permissible projected area, as defined in EN ISO 80079-36 : 2016 section 6.7.5 table 8, the following protection methods must be applied
   - Equipment is always used to transfer electrically conductive fluids or
   - Explosive environment is prevented from entering the internal portions of the pump, i.e. dry running.

Temperature Tables

Table 1. Category 2 ATEX Rated Pumps

Ambient Temperature Range [°C]	Process Temperature Range [°C]	Temperature Class	Maximum Surface Temperature [°C]
-20°C to +60°C	-40°C to +80°C	T5	T100°C
	-40°C to +108°C	T4	T135°C
	-40°C to + 160°C	T3	T200°C
	-40°C to +177°C	(225°C) T2	

Table 2. Category M2 ATEX Rated Pumps for Mining

Ambient Temperature Range [°C]	Process Temperature Range [°C]
-20°C to +60°C	-40°C to +150°C

Note: The ambient temperature range and the process temperature range should not exceed the operating temperature range of the applied plastic parts as listed in the manuals of the pumps.

Table of Contents

SECTION 1: PUMP SPECIFICATIONS.....1

- Nomenclature
- Performance
- Materials
- Dimensional Drawings

SECTION 2: INSTALLATION & OPERATION ...8

- Principle of Pump Operation
- Typical Installation Guide
- Troubleshooting

SECTION 3: EXPLODED VIEW.....11

- Composite Drawings
- Parts List
- Materials Code

SECTION 4: WARRANTY & CERTIFICATES ..14

- Warranty
- EU Declaration of Conformity - Machinery Directive
- EU Declaration of Conformity - ATEX Directive
- EU Declaration of Conformity - EU Regulation 1935/2004/EC

Explanation of Pump Nomenclature

Your Serial #: *(fill in from pump nameplate)* _____

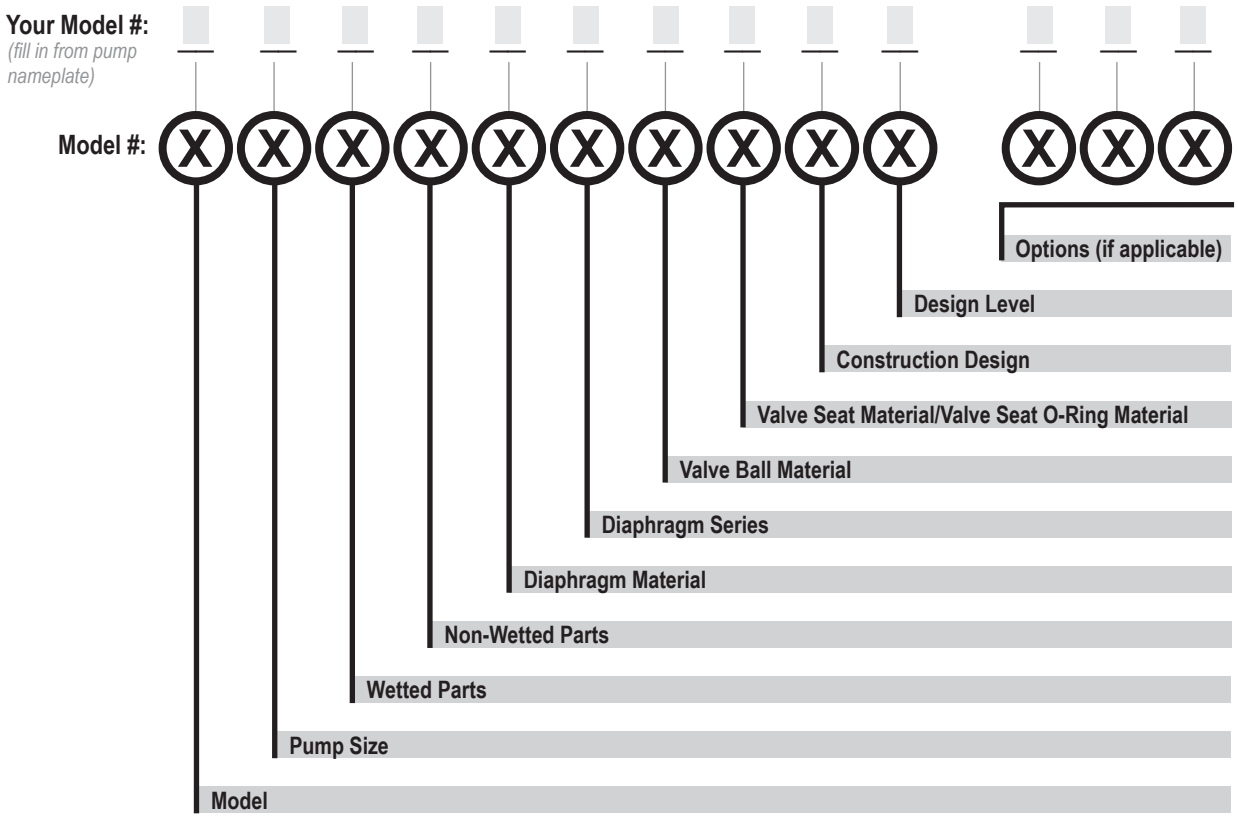

Model
E Elima-Matic
U Ultra-Matic

Pump Size
6 1/4"
8 3/8"
5 1/2"
7 3/4"
1 1"
4 1-1/4" or 1-1/2"
2 2"
3 3"

Wetted Parts
A Aluminum
C Cast Iron
S Stainless Steel
H Alloy C
P Polypropylene
K Kynar
G Groundable Acetal
B Aluminum (screen mount)

Non-Wetted Parts
A Aluminum
S Stainless Steel
P Polypropylene
G Groundable Acetal
Z PTFE-coated Aluminum
J Nickel-plated Aluminum
C Cast Iron

Diaphragm Material
1 Neoprene
2 Nitrile (Nitrile)
3 FKM (Fluorocarbon)
4 EPDM
5 PTFE
6 Santoprene XL
7 Hytrel
Y FDA Santoprene

Diaphragm Series
R Rugged
D Domed
X Thermo-Matic
T Tef-Matic (2-piece)
B Versa-Tuff (1-piece)
F FUSION (one-piece integrated plate)

Valve Ball Material Valve
1 Neoprene
2 Nitrile
3 (FKM) Fluorocarbon
4 EPDM
5 PTFE
6 Santoprene XL
7 Hytrel
8 Polyurethane
S Stainless Steel
Y FDA Santoprene

Seat/Valve Seat O-Ring Material
1 Neoprene
2 Nitrile
3 (FKM) Fluorocarbon
4 EPDM
5 PTFE
6 Santoprene XL
7 Hytrel
8 Polyurethane
A Aluminum w/ PTFE O-Rings
S Stainless Steel w/ PTFE O-Rings
C Carbon Steel w/ PTFE O-Rings
H Alloy C w/ PTFE O-Rings
T PTFE Encapsulated Silicone O-Rings
Y FDA Santoprene

Construction Design
9 Bolted
0 Clamped

Design Level
A
C

Miscellaneous Options
B BSP Tapered Thread
CP Center Port
ATEX ATEX Compliant
FP Food Processing
SP Sanitary Pump
HP High Pressure
HD Horizontal Discharge
3A 3-A Certified

*More than one option may be specified for a particular pump model.

Materials

Material Profile:	Operating Temperatures:	
⚠ *CAUTION! Operating temperature limitations are as follows:*	Max.	Min.
Conductive Acetal: Tough, impact resistant, ductile. Good abrasion resistance and low friction surface. Generally inert, with good chemical resistance except for strong acids and oxidizing agents.	190°F 88°C	-20°F -29°C
EPDM: Shows very good water and chemical resistance. Has poor resistance to oils and solvents, but is fair in ketones and alcohols.	280°F 138°C	-40°F -40°C
FKM: (Fluorocarbon) Shows good resistance to a wide range of oils and sovents; especially all aliphatic, aromatic and halogenated hydrocarbons, acids, animal and vegetable oils. Hot water or hot aqueous solutions (over 70°F) will attack FKM.	350°F 177°C	-40°F -40°C
Hytrel®: Good on acids, bases, amines and glycols at room temperatures only.	220°F 104°C	-20°F -29°C
Neoprene: All purpose. Resistance to vegetable oils. Generally not affected by moderate chemicals, fats, greases and many oils and solvents. Generally attacked by strong oxidizing acids, ketones, esters and nitro hydrocarbons and chlorinated aromatic hydrocarbons.	200°F 93°C	-10°F -23°C
Nitrile: General purpose, oil-resistant. Shows good solvent, oil, water and hydraulic fluid resistance. Should not be used with highly polar solvents like acetone and MEK, ozone, chlorinated hydrocarbons and nitro hydrocarbons.	190°F 88°C	-10°F -23°C
Nylon: 6/6 High strength and toughness over a wide temperature range. Moderate to good resistance to fuels, oils and chemicals.	180°F 82°C	32°F 0°C
Polypropylene: A thermoplastic polymer. Moderate tensile and flex strength. Resists stong acids and alkali. Attacked by chlorine, fuming nitric acid and other strong oxidizing agents.	180°F 82°C	32°F 0°C
PVDF: (Polyvinylidene Fluoride) A durable fluoroplastic with excellent chemical resistance. Excellent for UV applications. High tensile strength and impact resistance.	250°F 121°C	0°F -18°C
Santoprene®: Injection molded thermoplastic elastomer with no fabric layer. Long mechanical flex life. Excellent abrasion resistance.	275°F 135°C	-40°F -40°C
UHMW PE: A thermoplastic that is highly resistant to a broad range of chemicals. Exhibits outstanding abrasion and impact resistance, along with environmental stress-cracking resistance.	180°F 82°C	-35°F -37°C
Urethane: Shows good resistance to abrasives. Has poor resistance to most solvents and oils.	150°F 66°C	32°F 0°C
Virgin PTFE: (PFA/TFE) Chemically inert, virtually impervious. Very few chemicals are known to chemically react with PTFE; molten alkali metals, turbulent liquid or gaseous fluorine and a few fluoro-chemicals such as chlorine trifluoride or oxygen difluoride which readily liberate free fluorine at elevated temperatures.	220°F 104°C	-35°F -37°C

Maximum and Minimum Temperatures are the limits for which these materials can be operated. Temperatures coupled with pressure affect the longevity of diaphragm pump components. Maximum life should not be expected at the extreme limits of the temperature ranges.

Metals:

Alloy C: Equal to ASTM494 CW-12M-1 specification for nickel and nickel alloy.

Stainless Steel: Equal to or exceeding ASTM specification A743 CF-8M for corrosion resistant iron chromium, iron chromium nickel and nickel based alloy castings for general applicaitons. Commonly referred to as 316 Stainless Steel in the pump industry.

For specific applications, always consult the Chemical Resistance Chart.

Note: This document is a high level guide. Please be aware that not all model and or material combinations are possible for all sizes. Please consult factory or your distributor for specific details.

Performance

E1 1" Bolted Metal
TPE Fitted

Flow Rate
Adjustable to . . . . . 0-49 gpm (185.5 lpm)
Port Size
Suction . . . . . 1½" TRI-CLAMP
Discharge . . . . . 1½" TRI-CLAMP
Air Inlet . . . . . 3/8" NPT
Air Exhaust . . . . . 1/2" NPT
Suction Lift
Dry . . . . . 16' (4.9 m)
Wet . . . . . 31' (9.4 m)
Max Solid Size (Diameter)
. . . . . 1/8" (3.1 mm)
Max Noise Level . . . . . 93 dB(A)
Shipping Weights
Stainless Steel . . . . . 36 lbs (16.3 kg)

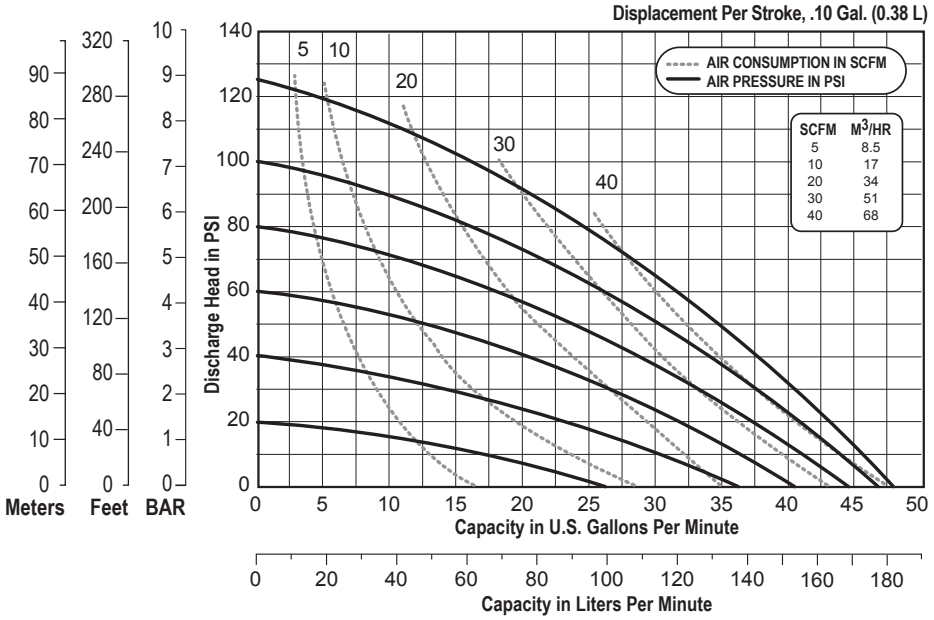

NOTE: Performance based on the following: elastomeric fitted pump, flooded suction, water at ambient conditions. The use of other materials and varying hydraulic conditions may result in deviations in excess of 5%.

E1 1" Bolted Metal
PTFE Fitted

Flow Rate
Adjustable to . . . . . 0-38 gpm (136.3 lpm)
Port Size
Suction . . . . . 1½" TRI-CLAMP
Discharge . . . . . 1½" TRI-CLAMP
Air Inlet . . . . . 3/8" NPT
Air Exhaust . . . . . 1/2" NPT
Suction Lift
Dry . . . . . 11' (3.4 m)
Wet . . . . . 31' (9.4 m)
Max Solid Size (Diameter)
. . . . . 1/8" (3.1 mm)
Max Noise Level . . . . . 96 dB(A)
Shipping Weights
Stainless Steel . . . . . 36 lbs (16.3 kg)

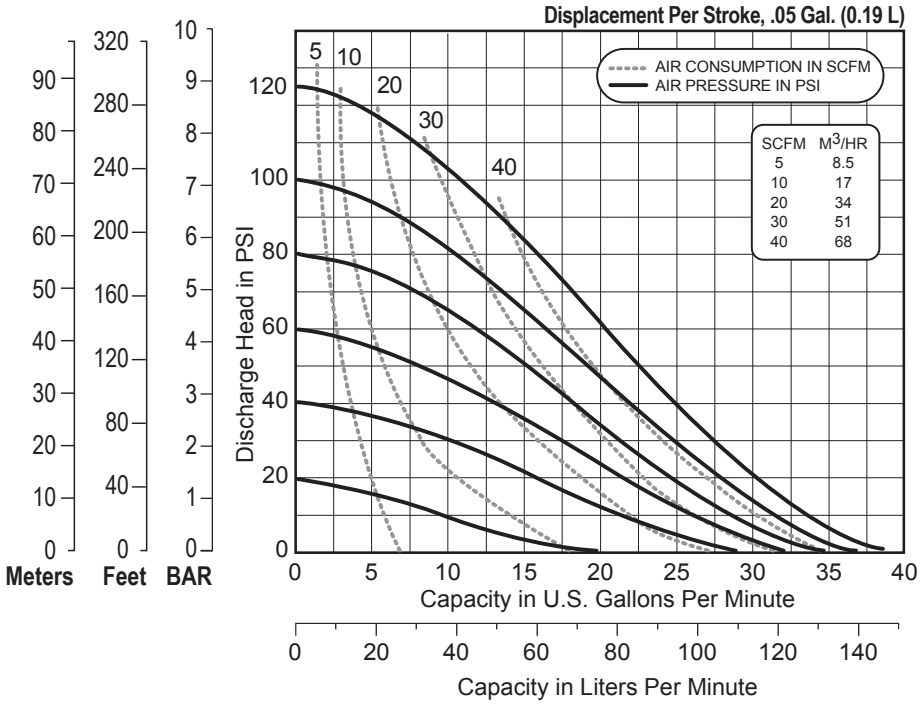

NOTE: Performance based on the following: PTFE fitted pump, flooded suction, water at ambient conditions. The use of other materials and varying hydraulic conditions may result in deviations in excess of 5%.

Dimensional Drawings

E1 1" Bolted Metal

Dimensions in inches (mm dimensions in brackets)

The dimensions on this drawing are for reference only. A certified drawing can be requested if physical dimensions are needed.

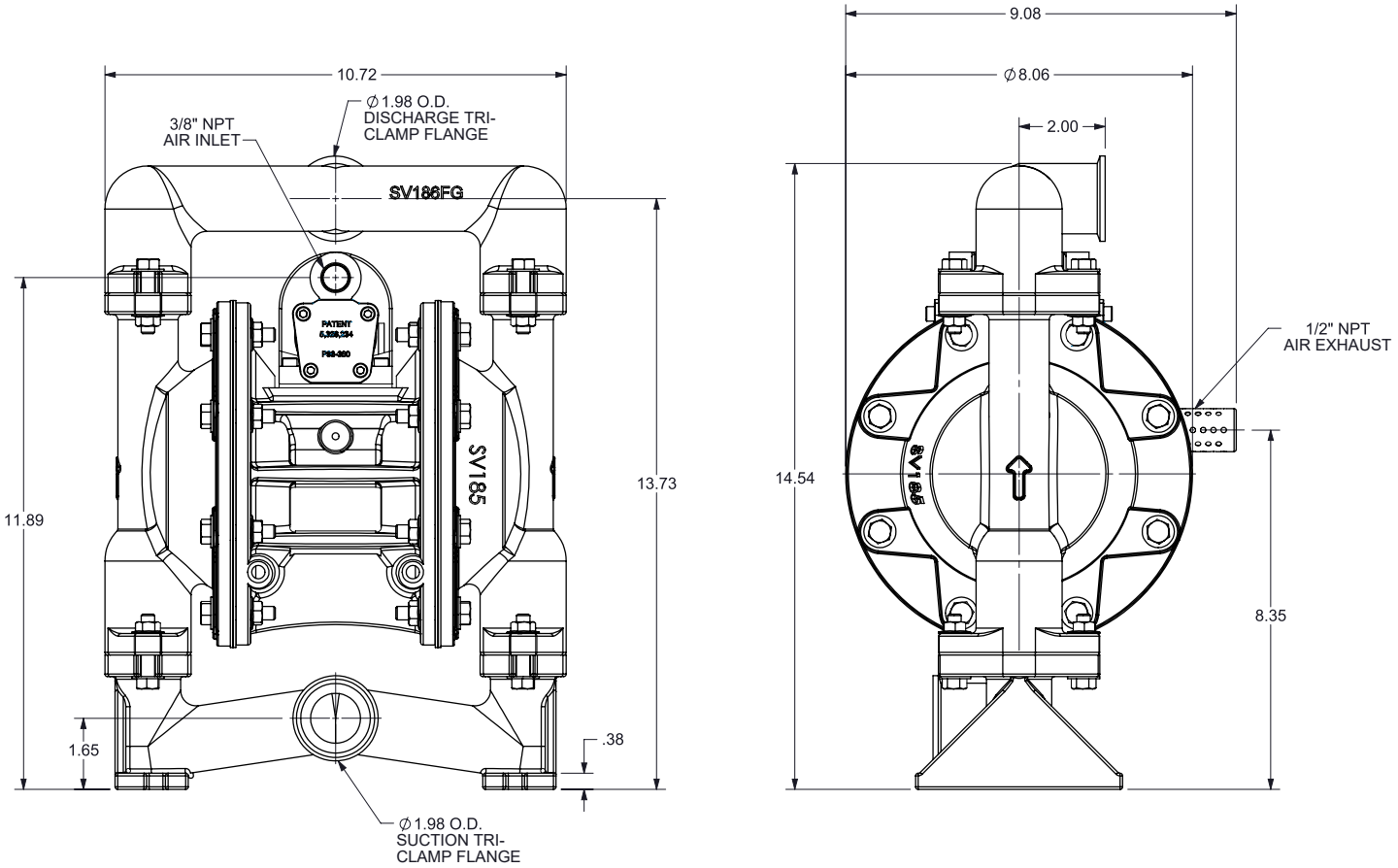

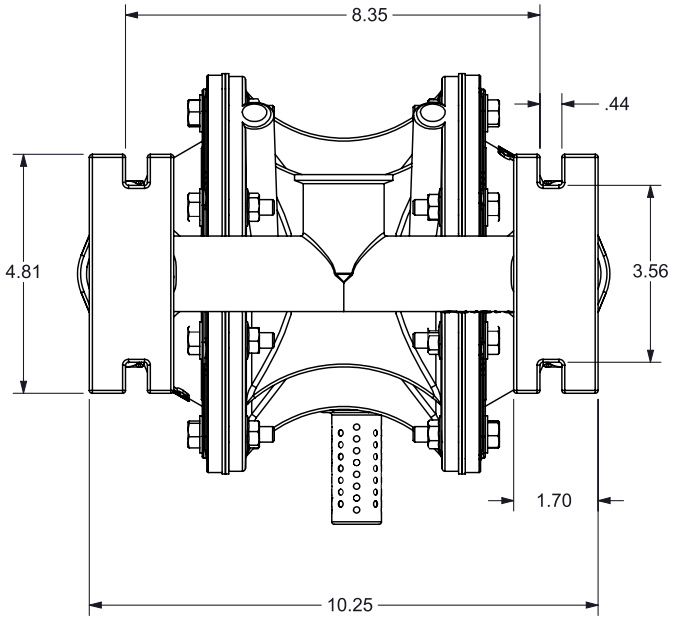

Principle of Pump Operation

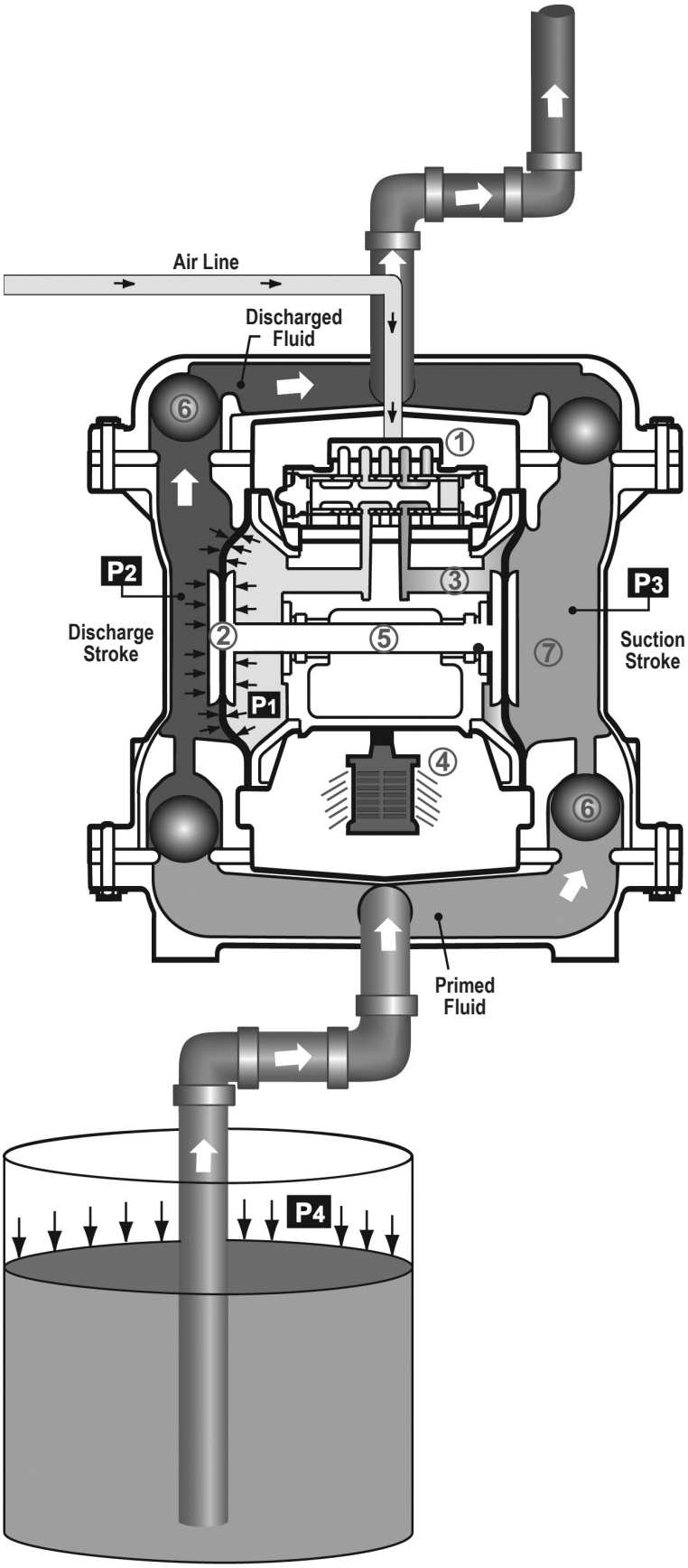

Air-Operated Double Diaphragm (AODD) pumps are powered by compressed air or nitrogen.

The main directional (air) control valve ① distributes compressed air to an air chamber, exerting uniform pressure over the inner surface of the diaphragm ②. At the same time, the exhausting air ③ from behind the opposite diaphragm is directed through the air valve assembly(s) to an exhaust port ④.

As inner chamber pressure **(P1)** exceeds liquid chamber pressure **(P2)**, the rod ⑤ connected diaphragms shift together creating discharge on one side and suction on the opposite side. The discharged and primed liquid's directions are controlled by the check valves (ball or flap)⑥ orientation.

The pump primes as a result of the suction stroke. The suction stroke lowers the chamber pressure **(P3)** increasing the chamber volume. This results in a pressure differential necessary for atmospheric pressure **(P4)** to push the fluid through the suction piping and across the suction side check valve and into the outer fluid chamber ⑦.

Suction (side) stroking also initiates the reciprocating (shifting, stroking or cycling) action of the pump. The suction diaphragm's movement is mechanically pulled through its stroke. The diaphragm's inner plate makes contact with an actuator plunger aligned to shift the pilot signaling valve. Once actuated, the pilot valve sends a pressure signal to the opposite end of the main directional air valve, redirecting the compressed air to the opposite inner chamber.

SUBMERGED ILLUSTRATION

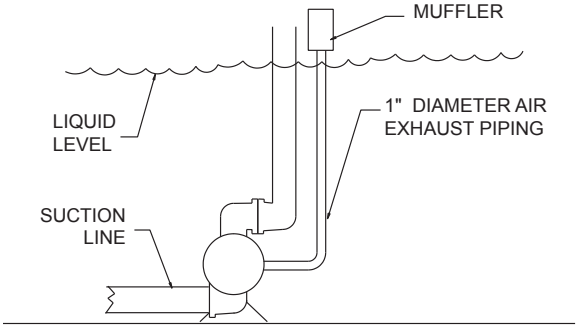

Pump can be submerged if the pump materials of construction are compatible with the liquid being pumped. The air exhaust must be piped above the liquid level. When the pumped product source is at a higher level than the pump (flooded suction condition), pipe the exhaust higher than the product source to prevent siphoning spills.

Recommended Installation Guide

Available Accessories:

1. Surge Suppressor
2. Filter/Regulator
3. Air Dryer
4. Lubricator

Note: Surge Suppressor and Piping, including air line, must be supported after the flexible connections.

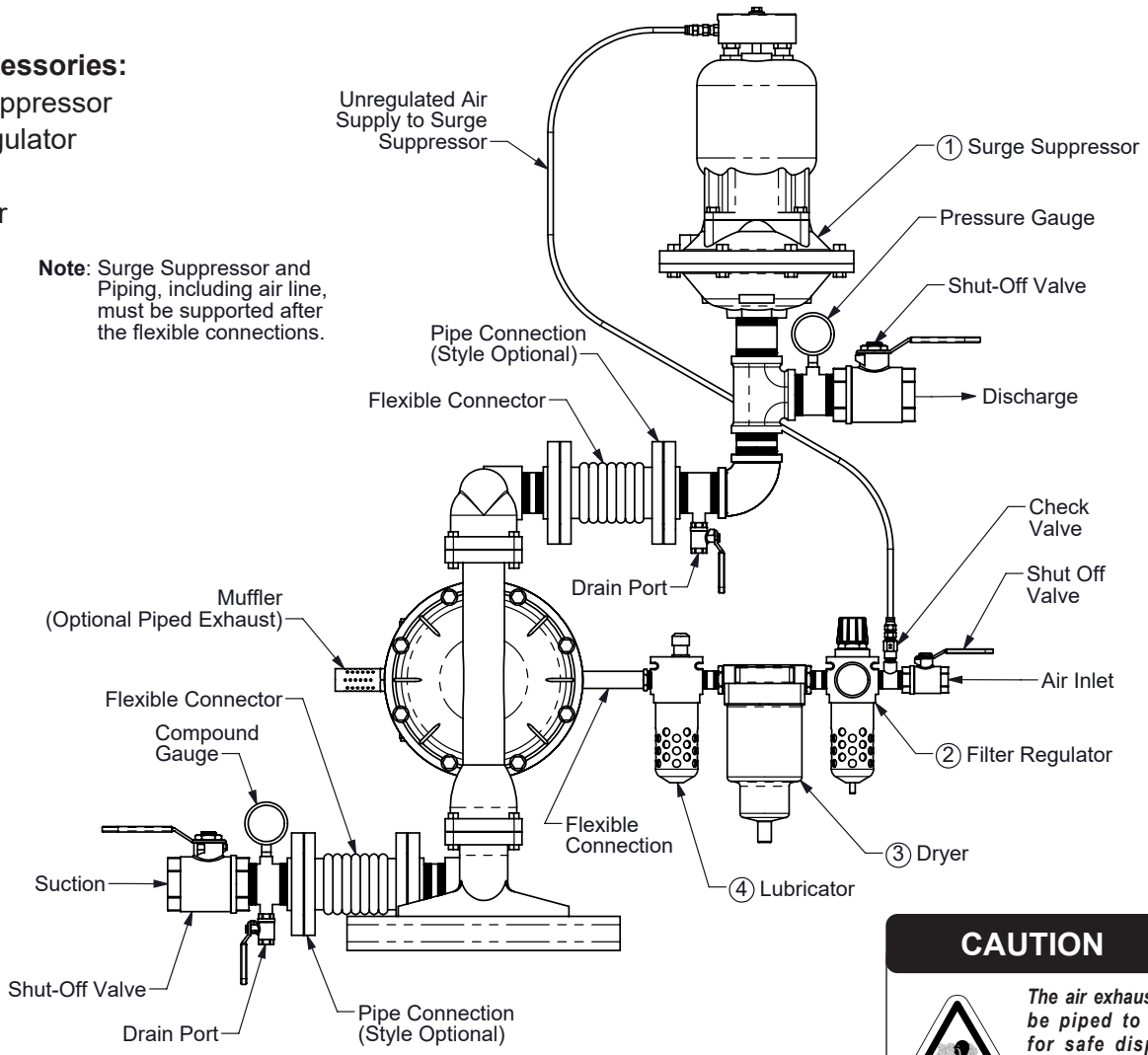

CAUTION

The air exhaust should be piped to an area for safe disposition of the product being pumped, in the event of a diaphragm failure.

Installation And Start-Up

Locate the pump as close to the product being pumped as possible. Keep the suction line length and number of fittings to a minimum. Do not reduce the suction line diameter.

Air Supply

Connect the pump air inlet to an air supply with sufficient capacity and pressure to achieve desired performance. A pressure regulating valve should be installed to insure air supply pressure does not exceed recommended limits.

Air Valve Lubrication

The air distribution system is designed to operate WITHOUT lubrication. This is the standard mode of operation. If lubrication is desired, install an air line lubricator set to deliver one drop of SAE 10 non-detergent oil for every 20 SCFM (9.4 liters/sec.) of air the pump consumes. Consult the Performance Curve to determine air consumption.

Air Line Moisture

Water in the compressed air supply may cause icing or freezing of the exhaust air, causing the pump to cycle erratically or stop operating. Water in the air supply can be reduced by using a point-of-use air dryer.

Air Inlet And Priming

To start the pump, slightly open the air shut-off valve. After the pump primes, the air valve can be opened to increase air flow as desired. If opening the valve increases cycling rate, but does not increase the rate of flow, cavitation has occurred. The valve should be closed slightly to obtain the most efficient air flow to pump flow ratio.

Troubleshooting Guide

Symptom:	Potential Cause(s):	Recommendation(s):
Pump Cycles Once	Deadhead (system pressure meets or exceeds air supply pressure).	Increase the inlet air pressure to the pump. Pump is designed for 1:1 pressure ratio at zero flow. (Does not apply to high pressure 2:1 units).
	Air valve or intermediate gaskets installed incorrectly.	Install gaskets with holes properly aligned.
	Bent or missing actuator plunger.	Remove pilot valve and inspect actuator plungers.
Pump Will Not Operate / Cycle	Pump is over lubricated.	Set lubricator on lowest possible setting or remove. Units are designed for lube free operation.
	Lack of air (line size, PSI, CFM).	Check the air line size and length, compressor capacity (HP vs. cfm required).
	Check air distribution system.	Disassemble and inspect main air distribution valve, pilot valve and pilot valve actuators.
	Discharge line is blocked or clogged manifolds.	Check for inadvertently closed discharge line valves. Clean discharge manifolds/piping.
	Deadhead (system pressure meets or exceeds air supply pressure).	Increase the inlet air pressure to the pump. Pump is designed for 1:1 pressure ratio at zero flow. (Does not apply to high pressure 2:1 units).
	Blocked air exhaust muffler.	Remove muffler screen, clean or de-ice, and re-install.
	Pumped fluid in air exhaust muffler.	Disassemble pump chambers. Inspect for diaphragm rupture or loose diaphragm plate assembly.
	Pump chamber is blocked.	Disassemble and inspect wetted chambers. Remove or flush any obstructions.
Pump Cycles and Will Not Prime or No Flow	Cavitation on suction side.	Check suction condition (move pump closer to product).
	Check valve obstructed. Valve ball(s) not seating properly or sticking.	Disassemble the wet end of the pump and manually dislodge obstruction in the check valve pocket. Clean out around valve ball cage and valve seat area. Replace valve ball or valve seat if damaged. Use heavier valve ball material.
	Valve ball(s) missing (pushed into chamber or manifold).	Worn valve ball or valve seat. Worn fingers in valve ball cage (replace part). Check Chemical Resistance Guide for compatibility.
	Valve ball(s)/seat(s) damaged or attacked by product.	Check Chemical Resistance Guide for compatibility.
	Check valve and/or seat is worn or needs adjusting.	Inspect check valves and seats for wear and proper setting. Replace if necessary.
	Suction line is blocked.	Remove or flush obstruction. Check and clear all suction screens or strainers.
	Excessive suction lift.	For lifts exceeding 20' of liquid, filling the chambers with liquid will prime the pump in most cases.
	Suction side air leakage or air in product.	Visually inspect all suction-side gaskets and pipe connections.
	Pumped fluid in air exhaust muffler.	Disassemble pump chambers. Inspect for diaphragm rupture or loose diaphragm plate assembly.
Pump Cycles Running Sluggish/Stalling, Flow Unsatisfactory	Over lubrication.	Set lubricator on lowest possible setting or remove. Units are designed for lube free operation.
	Icing.	Remove muffler screen, de-ice, and re-install. Install a point of use air drier.
	Clogged manifolds.	Clean manifolds to allow proper air flow
	Deadhead (system pressure meets or exceeds air supply pressure).	Increase the inlet air pressure to the pump. Pump is designed for 1:1 pressure ratio at zero flow. (Does not apply to high pressure 2:1 units).
	Cavitation on suction side.	Check suction (move pump closer to product).
	Lack of air (line size, PSI, CFM).	Check the air line size, length, compressor capacity.
	Excessive suction lift.	For lifts exceeding 20' of liquid, filling the chambers with liquid will prime the pump in most cases.
	Air supply pressure or volume exceeds system hd.	Decrease inlet air (press. and vol.) to the pump. Pump is cavitating the fluid by fast cycling.
	Undersized suction line.	Meet or exceed pump connections.
	Restrictive or undersized air line.	Install a larger air line and connection.
	Suction side air leakage or air in product.	Visually inspect all suction-side gaskets and pipe connections.
	Suction line is blocked.	Remove or flush obstruction. Check and clear all suction screens or strainers.
	Pumped fluid in air exhaust muffler.	Disassemble pump chambers. Inspect for diaphragm rupture or loose diaphragm plate assembly.
	Check valve obstructed.	Disassemble the wet end of the pump and manually dislodge obstruction in the check valve pocket.
	Check valve and/or seat is worn or needs adjusting.	Inspect check valves and seats for wear and proper setting. Replace if necessary.
	Entrained air or vapor lock in chamber(s).	Purge chambers through tapped chamber vent plugs. Purging the chambers of air can be dangerous.
Product Leaking Through Exhaust	Diaphragm failure, or diaphragm plates loose.	Replace diaphragms, check for damage and ensure diaphragm plates are tight.
	Diaphragm stretched around center hole or bolt holes.	Check for excessive inlet pressure or air pressure. Consult Chemical Resistance Chart for compatibility with products, cleaners, temperature limitations and lubrication.
Premature Diaphragm Failure	Cavitation.	Enlarge pipe diameter on suction side of pump.
	Excessive flooded suction pressure.	Move pump closer to product. Raise pump/place pump on top of tank to reduce inlet pressure. Install Back pressure device (Tech bulletin 41r). Add accumulation tank or pulsation dampener.
	Misapplication (chemical/physical incompatibility).	Consult Chemical Resistance Chart for compatibility with products, cleaners, temperature limitations and lubrication.
	Incorrect diaphragm plates or plates on backwards, installed incorrectly or worn.	Check Operating Manual to check for correct part and installation. Ensure outer plates have not been worn to a sharp edge.
Unbalanced Cycling	Excessive suction lift.	For lifts exceeding 20' of liquid, filling the chambers with liquid will prime the pump in most cases.
	Undersized suction line.	Meet or exceed pump connections.
	Pumped fluid in air exhaust muffler.	Disassemble pump chambers. Inspect for diaphragm rupture or loose diaphragm plate assembly.
	Suction side air leakage or air in product.	Visually inspect all suction-side gaskets and pipe connections.
	Check valve obstructed.	Disassemble the wet end of the pump and manually dislodge obstruction in the check valve pocket.
	Check valve and/or seat is worn or needs adjusting.	Inspect check valves and seats for wear and proper setting. Replace if necessary.
	Entrained air or vapor lock in chamber(s).	Purge chambers through tapped chamber vent plugs.

For additional troubleshooting tips contact After Sales Support at service.warrenrupp@idexcorp.com or 419-524-8388

Composite Repair Parts Drawing

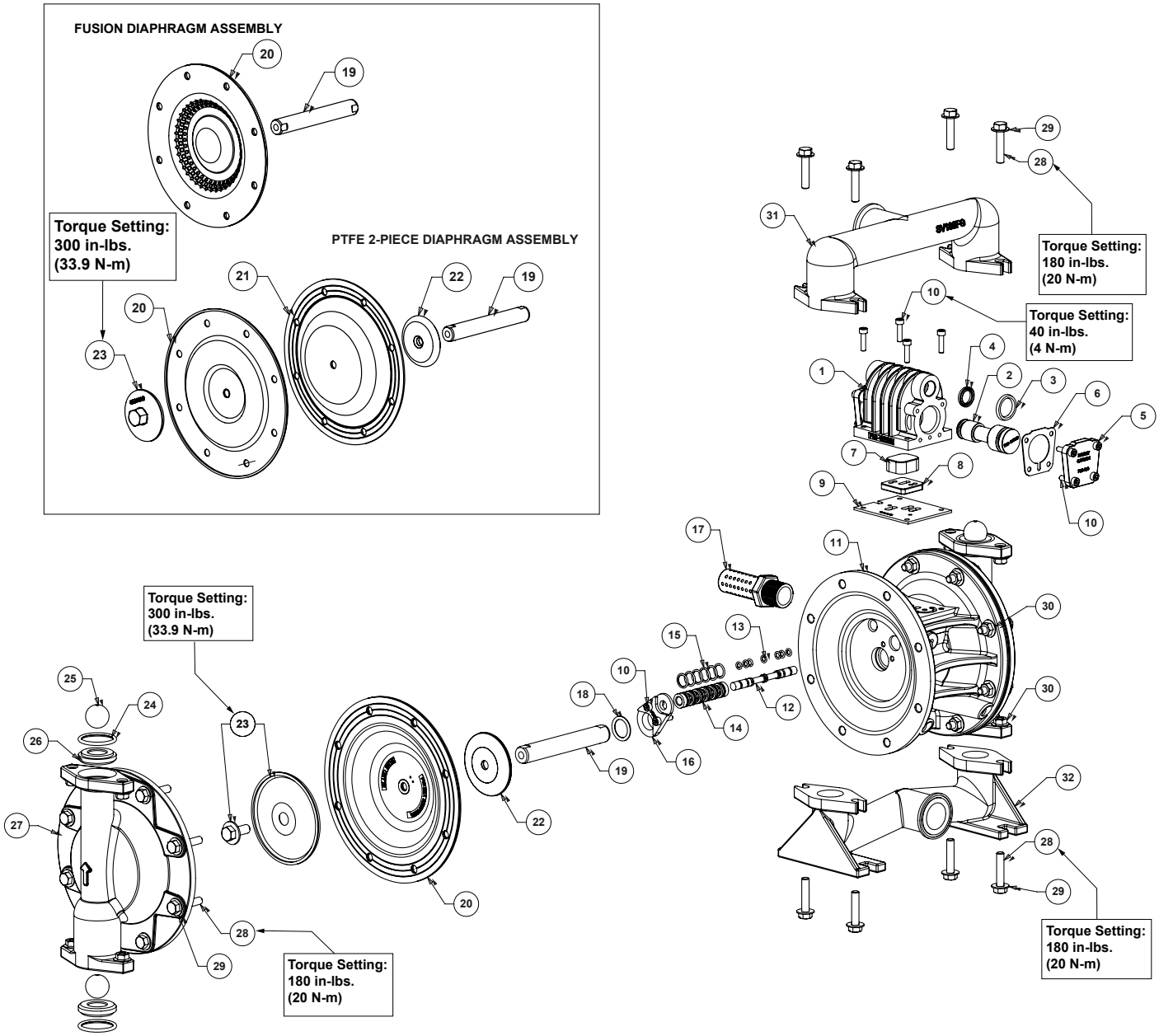

Composite Repair Parts List

Air Valve Assembly			
Item #	Qty.	Description	Part Number
		Air Side Repair Kit (Includes Items 3,4,6-9,12-15,16,18)	476.V015.000
-	1	Air Valve Assembly (includes items 1-10)	031.V006.332
1	1	Valve Body	095.V003.332
2	1	Valve Spool Assembly (Includes items 3&4)	P98-105UB ASY
3	1	Large Valve Spool U-Cup	P98-105B
4	1	Small Valve Spool U-Cup	P98-105A
5	2	Metal End Cap	P98-300TC
6	2	End Cap Gasket (for metal)	P98-110
7	1	CT Air Diverter	P98-105CT
8	1	Air Diverter Plate	612.V003.114
9	1	Air Valve Gasket	P98-111UB
10	12	Mounting Screws (8 included on Air Valve Assembly)	S1001

Center Section Assembly			
Item #	Qty.	Description	Part Number
			Nickel Plated
11	1	Center Section	114.V001.332
		Pilot Repair Kit (Includes Items 12-16)	476.V014.000
12	1	Pilot Spool ASY (includes item 13)	775.V005.000
13	7	Pilot Spool O-Rings	560.023.358
14	1	Pilot Valve Sleeve ASY (includes item 15)	755.V004.000
15	6	Pilot Valve Sleeve O-Rings	560.101.358
16	2	Shaft/Pilot Retainer	670.V002.554
10	4	Retainer Screw	S1001
17	1	Muffler	VTM-4A

Diaphragm Assembly / Elastomers						
Item #	Qty.	Description	Part Number			
			FDA Hytrel	FDA Santoprene	PTFE 2-Piece	PTFE Fusion
18	2	Main Shaft O-Ring	P50-403			
19	1	Main Shaft	685.V001.120	685.V001.120	P50-108	
20	2	Diaphragm	V183TPEFG	V183TPEXLFG	V183TF-1	V183F
21	2	Back-Up Diaphragm	N/A	N/A	V183TB	N/A
22	2	Inner Diaphragm Plate	SV181C			N/A
23	2	Outer Diaphragm Plate	SV181BASY		SV181TOFGF	N/A
24	4	Valve Seat O-Ring	SV190TF			
25	4	Valve Ball	V191TPEFG	V191TF		

Wet End Assembly			
Item #	Qty.	Description	Part Number
26	4	Valve Seat	SV190
27	2	Water Chamber	SV185FG
28	16	Water Chamber Bolt	SV189D
29	16	Water Chamber Washer	SV189C
30	16	Water Chamber Nut	SV185B
31	1	Discharge Manifold	SV186FG
32	1	Suction Manifold	SV187FG
28	8	Manifold Bolt	SV189D
29	8	Manifold Washer	SV189C
30	8	Manifold Nut	SV185B

Material Codes - The Last 3 Digits of Part Number

000.....Assembly, sub-assembly; and some purchased items
010.....Cast Iron
015.....Ductile Iron
020.....Ferritic Malleable Iron
080.....Carbon Steel, AISI B-1112
110.....Alloy Type 316 Stainless Steel
111.....Alloy Type 316 Stainless Steel (Electro Polished)
112.....Alloy C
113.....Alloy Type 316 Stainless Steel (Hand Polished)
114.....303 Stainless Steel
115.....302/304 Stainless Steel
117.....440-C Stainless Steel (Martensitic)
120.....416 Stainless Steel (Wrought Martensitic)
148.....Hardcoat Anodized Aluminum
150.....6061-T6 Aluminum
152.....2024-T4 Aluminum (2023-T351)
155.....356-T6 Aluminum
156.....356-T6 Aluminum
157.....Die Cast Aluminum Alloy #380
158.....Aluminum Alloy SR-319
162.....Brass, Yellow, Screw Machine Stock
165.....Cast Bronze, 85-5-5-5
166.....Bronze, SAE 660
170.....Bronze, Bearing Type, Oil Impregnated
180.....Copper Alloy
305.....Carbon Steel, Black Epoxy Coated
306.....Carbon Steel, Black PTFE Coated
307.....Aluminum, Black Epoxy Coated
308.....Stainless Steel, Black PTFE Coated
309.....Aluminum, Black PTFE Coated
313.....Aluminum, White Epoxy Coated
330.....Zinc Plated Steel
332.....Aluminum, Electroless Nickel Plated
333.....Carbon Steel, Electroless Nickel Plated
335.....Galvanized Steel
337.....Silver Plated Steel
351.....Food Grade Santoprene®
353.....Geolast; Color: Black
354.....Injection Molded #203-40 Santoprene® Duro 40D +/-5; Color: RED
356.....Hytrel®
357.....Injection Molded Polyurethane
358.....Urethane Rubber (Some Applications) (Compression Mold)
359.....Urethane Rubber
360.....Nitrile Rubber Color coded: RED
363.....FKM (Fluorocarbon) Color coded: YELLOW
364.....EPDM Rubber Color coded: BLUE
365.....Neoprene Rubber Color coded: GREEN
366.....Food Grade Nitrile
368.....Food Grade EPDM
371.....Philthane (Tuftane)
374.....Carboxylated Nitrile
375.....Fluorinated Nitrile
378.....High Density Polypropylene
379.....Conductive Nitrile
408.....Cork and Neoprene
425.....Compressed Fibre
426.....Blue Gard
440.....Vegetable Fibre
500.....Delrin® 500
502.....Conductive Acetal, ESD-800
503.....Conductive Acetal, Glass-Filled
506.....Delrin® 150
520.....Injection Molded PVDF Natural color
540.....Nylon
542.....Nylon
544.....Nylon Injection Molded
550.....Polyethylene
551.....Glass Filled Polypropylene
552.....Unfilled Polypropylene
555.....Polyvinyl Chloride
556.....Black Vinyl
558.....Conductive HDPE
570.....Rulon II®
580.....Ryton®
600.....PTFE (virgin material) Tetrafluorocarbon (TFE)
603.....Blue Gylon®
604.....PTFE
606.....PTFE
607.....Envelon
608.....Conductive PTFE
610.....PTFE Encapsulated Silicon
611.....PTFE Encapsulated FKM
632.....Neoprene/Hytrel®
633.....FKM/PTFE
634.....EPDM/PTFE
635.....Neoprene/PTFE
637.....PTFE, FKM/PTFE
638.....PTFE, Hytrel®/PTFE
639.....Nitrile/TFE
643.....Santoprene®/EPDM
644.....Santoprene®/PTFE
656.....Santoprene® Diaphragm and Check Balls/EPDM Seats
661.....EPDM/Santoprene®
666.....FDA Nitrile Diaphragm, PTFE Overlay, Balls, and Seals
668.....PTFE, FDA Santoprene®/PTFE

- Delrin and Hytrel are registered tradenames of E.I. DuPont.
- Nylatron is a registered tradename of Polymer Corp.
- Gylon is a registered tradename of Garlock, Inc.
- Santoprene is a registered tradename of Exxon Mobil Corp.
- Rulon II is a registered tradename of Dixion Industries Corp.
- Ryton is a registered tradename of Phillips Chemical Co.
- Valox is a registered tradename of General Electric Co.

RECYCLING

Warren Rupp, manufacturer of Versamatic, is an ISO14001 registered company and is committed to minimizing the impact our products have on the environment. Many components of Versamatic® AODD pumps are made of recyclable materials. We encourage pump users to recycle worn out parts and pumps whenever possible, after any hazardous pumped fluids are thoroughly flushed. Pump users that recycle will gain the satisfaction to know that their discarded part(s) or pump will not end up in a landfill. The recyclability of Versamatic products is a vital part of Warren Rupp's commitment to environmental stewardship.

5 - YEAR Limited Product Warranty

Quality System ISO9001 Certified • Environmental Management Systems ISO14001 Certified

Versamatic warrants to the original end-use purchaser that no product sold by Versamatic that bears a Versamatic brand shall fail under normal use and service due to a defect in material or workmanship within five years from the date of shipment from Versamatic's factory.

The use of non-OEM replacement parts will void (or negate) agency certifications, including CE, ATEX, CSA, 3A and EC1935 compliance (Food Contact Materials). Warren Rupp, Inc. cannot ensure nor warrant non-OEM parts to meet the stringent requirements of the certifying agencies.

~ See complete warranty at http://vm.salesmrc.com/pdfs/VM_Product_Warranty.pdf

DECLARATION OF CONFORMITY

DECLARATION DE CONFORMITE • DECLARACION DE CONFORMIDAD • ERKLÄRUNG BEZÜGLICH EINHALTUNG DER VORSCHRIFTEN
DICHIARAZIONE DI CONFORMITÀ • CONFORMITEITSVERKLARING • DEKLARATION OM ÖVERENSSTÄMMELSE
EF-OVERENSSTEMMELSESERKLÆRING • VAATIMUSTENMUKAISUUSVAKUUTUS • SAMSVARSERKLÄRING
DECLARAÇAO DE CONFORMIDADE

MANUFACTURED BY:
FABRIQUE PAR:
FABRICADA POR:
HERGESTELLT VON:
FABBRICATO DA:
VERVAARDIGD DOOR:
TILLVERKAD AV:
FABRIKANT:
VALMISTAJA:
PRODUSENT:
FABRICANTE:

VERSAMATIC ®
Warren Rupp, Inc.
A Unit of IDEX Corporation
800 North Main Street
P.O. Box 1568
Mansfield, OH 44901-1568 USA

Tel: 419-526-7296
Fax: 419-526-7289

PUMP MODEL SERIES: E SERIES, V SERIES, VT SERIES, VSMA3, SPA15, RE SERIES AND U2 SERIES

This product complies with the following European Community Directives:
Ce produit est conforme aux directives de la Communauté européenne suivantes:
Este producto cumple con las siguientes Directrices de la Comunidad Europea:
Dieses produkt erfüllt die folgenden Vorschriften der Europäischen Gemeinschaft:
Questo prodotto è conforme alle seguenti direttive CEE:
Dir produkt voldoet aan de volgende EG-richtlijnen:
Denna produkt överensstämmer med följande EU direktiv:
Versamatic, Inc., erklærer herved som fabrikant, at ovennævnte produkt er i overensstemmelse med bestemmelserne i Direkktive:
Tämä tuote täyttää seuraavien EC Direktiivien vaatimukstet:
Dette produkt oppfyller kravene til følgende EC Direktiver:
Este produto está de acordo com as seguintes Directivas comunitárias:

2006/42/EC
on Machinery, according to Annex VIII

This product has used the following harmonized standards to verify conformance:
Ce materiel est fabriqué selon les normes harmonisées suivantes, afin d' en garantir la conformité:
Este producto cumple con las siquientes directrices de la comunidad europa:
Dieses produkt ist nach folgenden harmonisierten standards gefertigtworden, die übereinstimmung wird bestätigt:
Questo prodotto ha utilizzato i seguenti standards per verificare la conformita´:
De volgende geharmoniseerde normen werden gehanteerd om de conformiteit van dit produkt te garanderen:
För denna produkt har följande harmoniserande standarder använts för att bekräfta överensstämmelse:
Harmoniserede standarder, der er benyttet:
Tässä tuotteessa on sovellettu seuraavia yhdenmukaistettuja standardeja:
Dette produkt er produsert i overenstemmelse med fløgende harmoniserte standarder:
Este produto utilizou os seguintes padrões harmonizados para varificar conformidade:

EN809:2012

AUTHORIZED/ APPROVED BY:
Approuve par:
Aprobado por:
Genehmigt von:
approvato da:
Goedgekeurd door:
Underskrift:
Valtuutettuna:
Bemyndiget av:
Autorizado Por:

Dave Roseberry
Director of Engineering

Authorized Representative:
IDEX Pump Technologies
R79 Shannon Industrial Estate,
Shannon, Co. Clare Ireland
Attn: Barry McMahon

DATE: February 27, 2017
FECHA:
DATUM:
DATA:
DATO:
PÄIVÄYS:

06/14/2017 REV 08

VMQR 044FM

EU Declaration of Conformity

Manufacturer:
Versamatic
A Unit of IDEX Corporation
800 North Main Street
Mansfield, OH 44902 USA

Warren Rupp, Inc declares that Air Operated Double Diaphragm Pumps (AODD) and Surge Suppressors listed below comply with the requirements of **Directive 2014/34/EU** and all the applicable standards.

Applicable Standards:

- EN ISO 80079-36: 2016
- EN ISO 80079-37: 2016
- EN60079-25: 2010

1. AODD Pumps and Surge Suppressors - Technical File No.: 20310400 -1410/MER

Hazardous Location Applied:

II 2 G Ex h IIC T5...225°C (T2) Gb
II 2 D Ex h IIIC T100°C...T200°C Db

- Metal pump models with external aluminum components (E-series)
- Versa-Surge® surge suppressors (VTA-Series)

2. AODD Pumps - Technical File No.: 20310400 -1410/MER - On File With: DEKRA Certification B.V. (0344)
Meander 1051
6825 MJ Arnhem
The Netherlands

Hazardous Location Applied:

I M2 Ex h Mb
II 2 G Ex h IIC T5...225°C (T2) Gb
II 2 D Ex h IIIC T100°C...T200°C Db

- Metal pump models with no external aluminum (E-Series)
- Conductive plastic pumps (E-Series Plastic)

➢ See “Safety Information” page for conditions of safe use

David Roseberry
Dave Roseberry
Director of Engineering

DATE/OF REVISION/TITLE:
19 DEC 2018

VERSAMATIC®

IDEX

VERSAMATIC®

Declaration of Conformity

Manufacturer: Warren Rupp, Inc., 800 N. Main Street, Mansfield, Ohio, 44902 USA
certifies that Elima-Matic® Air-Operated Double Diaphragm Food Processing and Sanitary Pump Models and Surge Suppressor Models comply with the European Community Regulations:
(EC) No 1935/2004 for Food Contact Materials
(EC) No 2023/2006 Good Manufacturing Practice
(EU) No 10/2011 on plastic materials and articles intended to come in contact with food

Food Processing Pump Models:

E4SJ5T5S0-FP-ATEX
E4SJ5F5S0-FP-ATEX
E4SJ5T5S0-FP
E4SJ5F5S0-FP
E4SJYXYY0-FP
E4SJ7X770-FP
E1SPYX5S9C-FP
E1SP7X759C-FP
E1SP5T559C-FP
E1SP5F559C-FP
E5SP5T5S9C-FP
E5SP5F5S9C-FP
E5SPYX559C-FP
E5SP7X7S9C-FP
E1SJ5T559C-FP-ATEX
E1SJ5F559C-FP-ATEX
E1SJ7X759C-FP-ATEX
E1SJYX559C-FP-ATEX
E2SJ5T5S0C-FP-ATEX
E2SJ5F5S0C-FP-ATEX
E2SJ7X770C-FP-ATEX
E2SJ7D770C-FP-ATEX
E2SS7D770C-FP-ATEX
E2SJYXYY0C-FP-ATEX
E2SSYXYY0C-FP-ATEX
E2SS7X770C-FP-ATEX
E3SJYXYY0C-FP-ATEX
E3SJ5T550C-FP-ATEX
E3SJ5F550C-FP-ATEX
E3SJ5T5S0C-FP-ATEX
E3SJ5F5S0C-FP-ATEX
E3SJ7X770C-FP-ATEX
E3SSYXYY0C-FP-ATEX
E3SS7X770C-FP-ATEX
E3SS5T550C-FP-ATEX
E3SS5F550C-FP-ATEX
E3SS5T5S0C-FP-ATEX

Surge Suppressor Models:

VDA051SPTNS00
VTA1,NG1SS.
VTA25,NG1SS.

Surge Suppressor Models cont.:

VTA1 1/2,NG1SS.
VTA40,NG1SS.
VTA2,NG2SS.
VTA50,NG2SS.
VTA3,NG2SS.
VTA80,NG2SS.

Sanitary Pump Models:

E4SJYXY40-SP
E4SJ7X750-SP
E2SJYXY40C-SP-ATEX
E2SJ7X750C-SP-ATEX
E4SJ5T550-SP-ATEX
E4SJ5F550-SP-ATEX
E2SJ5T550C-SP-ATEX
E2SJ5F550C-SP-ATEX
E2SS5T550C-SP-ATEX
E2SS5F550C-SP-ATEX
E2SSYXY 40C-SP-ATEX
E2SS7X750C-SP-ATEX

- Materials used in equipment intended for food contact (Annex I (EC) No 1935/2004) :
  - Rubber
  - Metals & Alloys
  - Plastics

Plastic Materials: PTFE and FKM/ PTFE coated
The plastic components are suitable to come in contact with multiple food types, provided that storage contact time does not exceed 1/2 hour, contact temperature does not exceed 40°C and maximum operating temperatures within the instructions manual are not exceeded. Diaphragm failure may allow process fluids to come in contact with nonconforming materials. Regular inspections are reccended.

- This Declaration is based on :
  - Declaration of Conformities from raw material suppliers
  - Total Migration Analysis per (EU) No 10/2011

- Supporting document will be made available to competent authorities to demonstrate compliance

David Roseberry
Signature of authorized person

February 8, 2013
Date of issue

David Roseberry
Printed name of authorized person

Director of Engineering
Title

February 6, 2018
Date of revision

IDEX