Edexcel B (R)

Trigonometry

2022 International GCSE Advance Information

Sparx Topics & Key Questions

We are always looking for ways to support maths teachers and students. In order to help you and your year 11s this year we've pulled together a list of key questions which may be useful to practise with your students based on the exam board topic lists.

These 17 key questions are all taken from our library of over 45,000 high-quality questions in Sparx Maths. If you are a Sparx Maths School then your students can use the Topic Codes provided to search the full content library directly within the independent learning section of Sparx Maths to help target their revision.

Please note this is not an exhaustive topic guide it is simply designed to help you pull together some key questions to use to check for understanding in lessons, starters, or as worksheets with your learners.

Trigonometry	Topics	Sparx Topic Codes
Trigonometry	Bearings	B460
	Trigonometry in 2-D	B732, B612, B312
	Sine and cosine rule and use of 0.5absinC	B249, B642, B833

Copyright Sparx 2022

Trigonometry - Bearings

Calculating with trigonometry and bearings B460

A crow flies $23\ \mathrm{km}$ at a bearing of $043°$.
It then flies $47\ \mathrm{km}$ due south and lands.

How far south of its starting point does the crow land?
Give your answer to 1 d.p.

Copyright Sparx 2022

Trigonometry - Trigonometry in 2-D

Understanding sin, cos and tan B732

What is the length of the **adjacent** side of this right-angled triangle, relative to

a) the 59° angle?

b) the 31° angle?

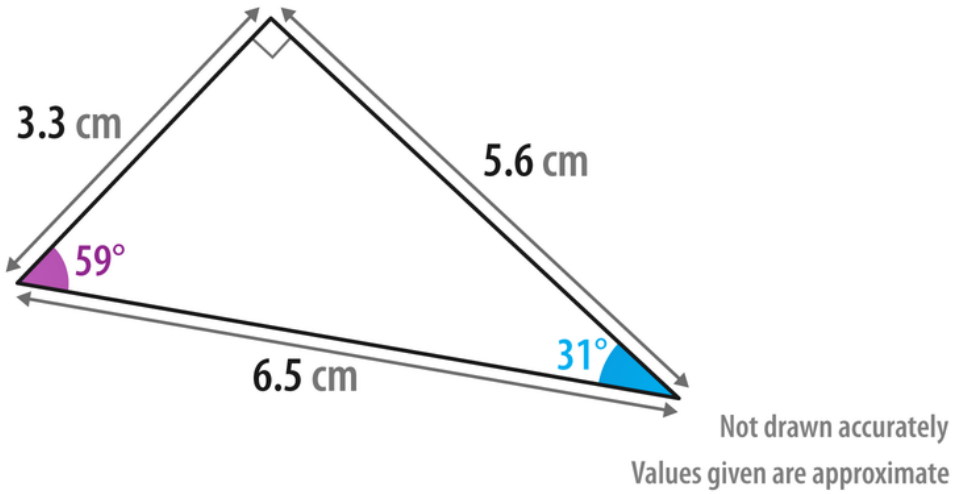

Copyright Sparx 2022

a) Relative to angle θ, which **two** of the following sides are labelled on the right-angled triangle below?

Hypotenuse **Opposite side** **Adjacent side**

b) Which of the equations shown below is correct?

$\cos\theta = \frac{3}{8}$ $\tan\theta = \frac{3}{8}$ $\sin\theta = \frac{3}{8}$

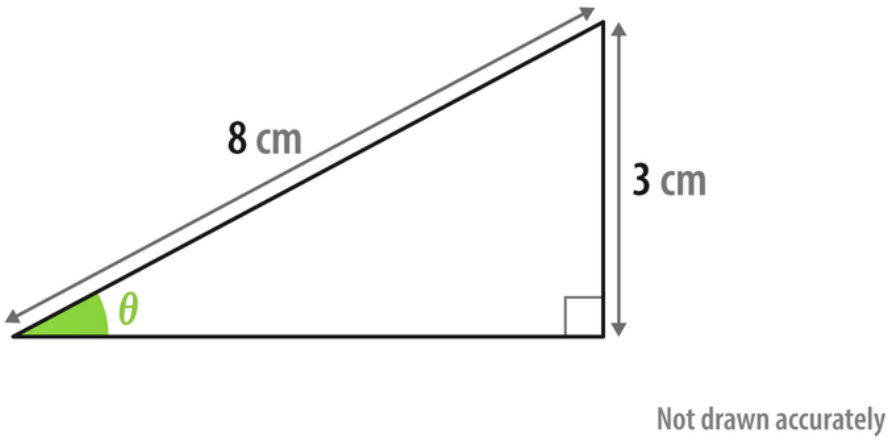

Finding unknown sides in right-angled triangles **B612**

Solve $\frac{6}{k} = \cos 46^\circ$

Give your answer to 2 d.p.

Copyright Sparx 2022

Using trigonometry, work out the perimeter of the right-angled triangle below.

Give your answer in metres to 1 d.p.

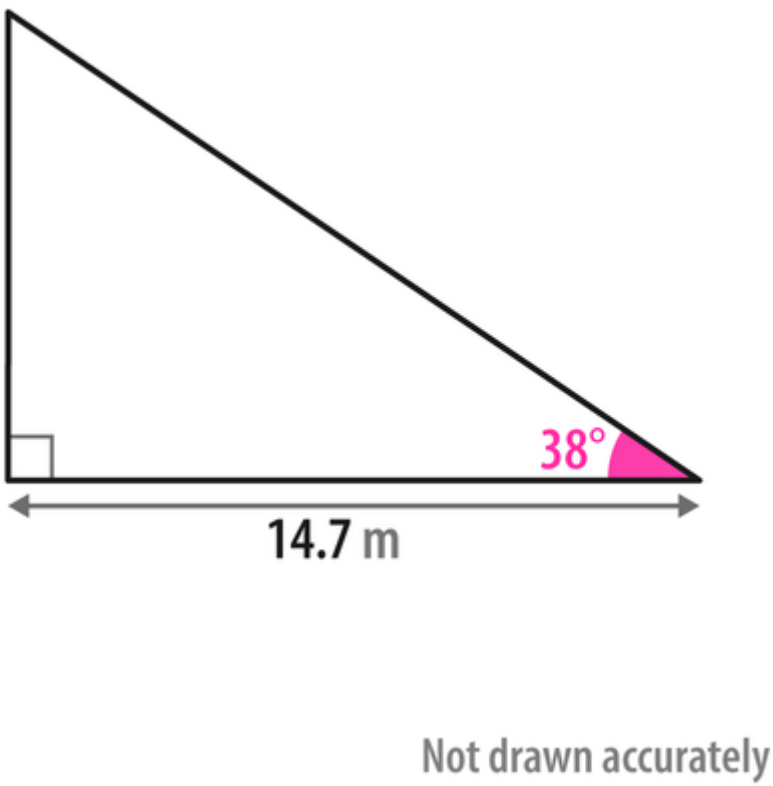

Copyright Sparx 2022

Jessica wants to use her $8.61\ \mathrm{m}$ long ladder against a wall, as shown below.
The instructions state that the angle between her ladder and the ground should be in the range 74° to 77°.

Calculate the maximum distance that the base of her ladder should be placed from the wall.
Give your answer in metres to 2 d.p.

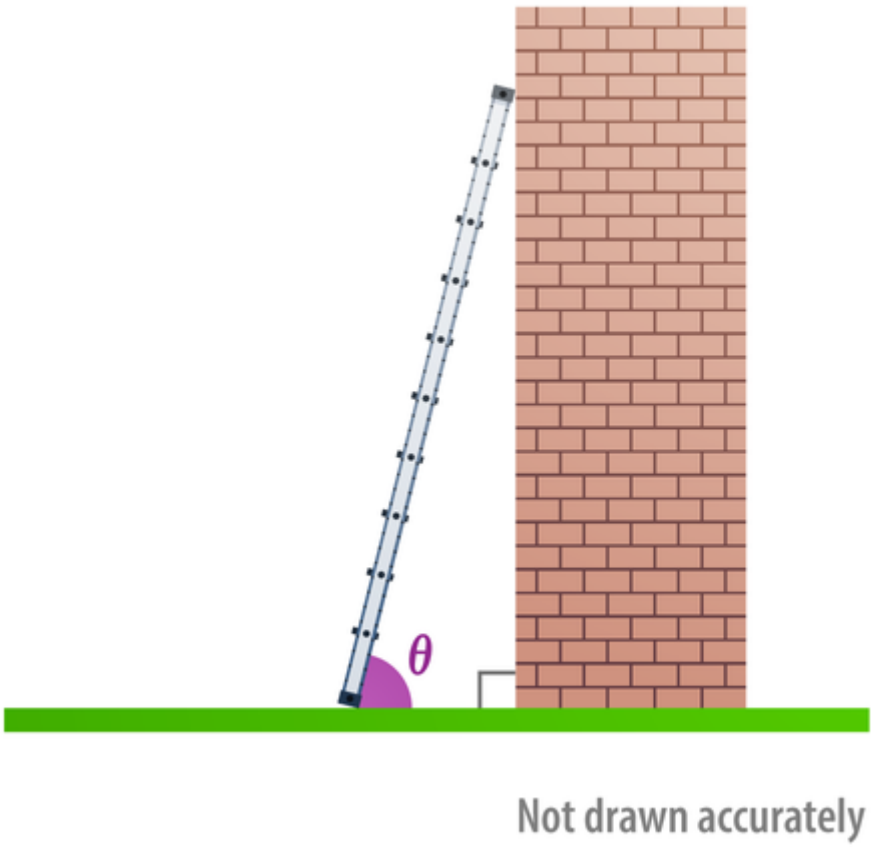

Copyright Sparx 2022

Finding unknown angles in right-angled triangles B312

Calculate the size of angle θ in the isosceles triangle below.

Give your answer in degrees to 1 d.p.

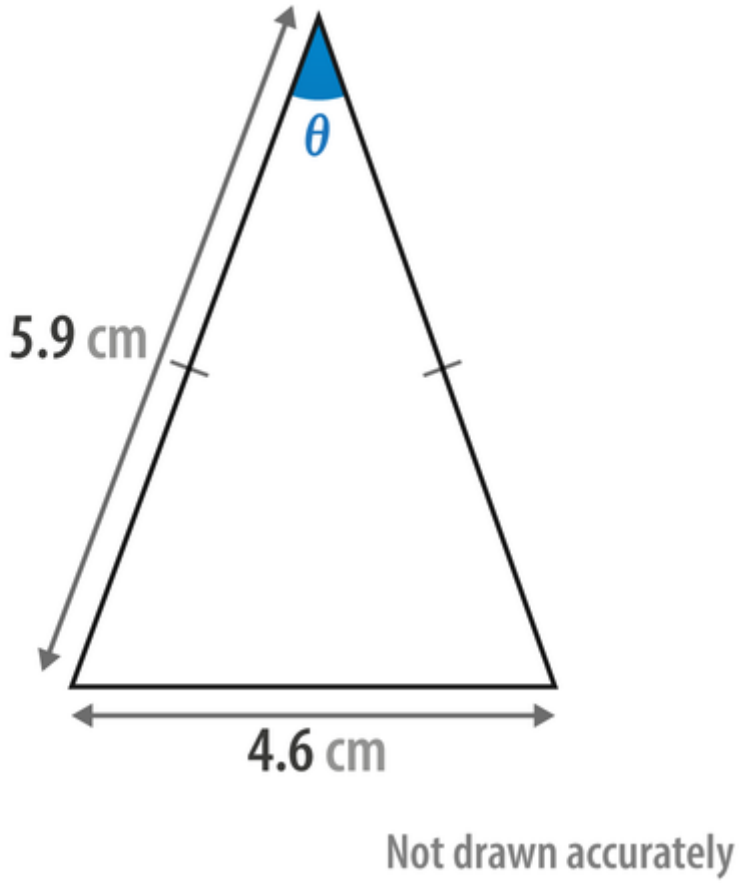

Copyright Sparx 2022

The front of the tent shown in the diagram below is an isosceles triangle.

Calculate the size of angle θ.
Give your answer in degrees to the nearest integer.

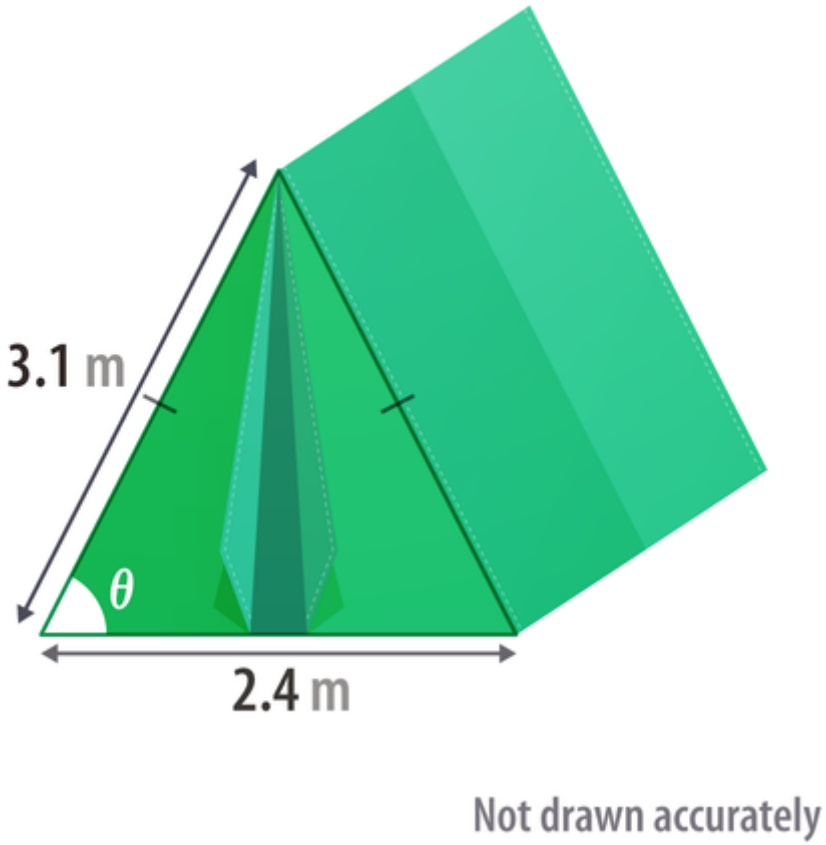

Copyright Sparx 2022

Using trigonometry, work out the perimeter of the right-angled triangle below.

Give your answer in metres to 1 d.p.

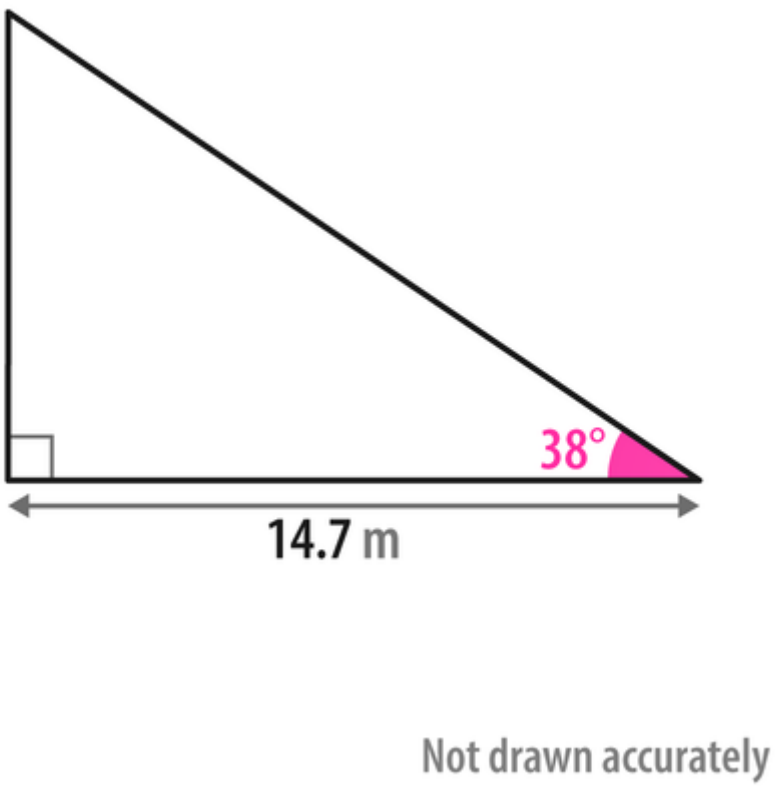

Copyright Sparx 2022

Calculate the size of angle θ in the isosceles triangle below.

Give your answer in degrees to 1 d.p.

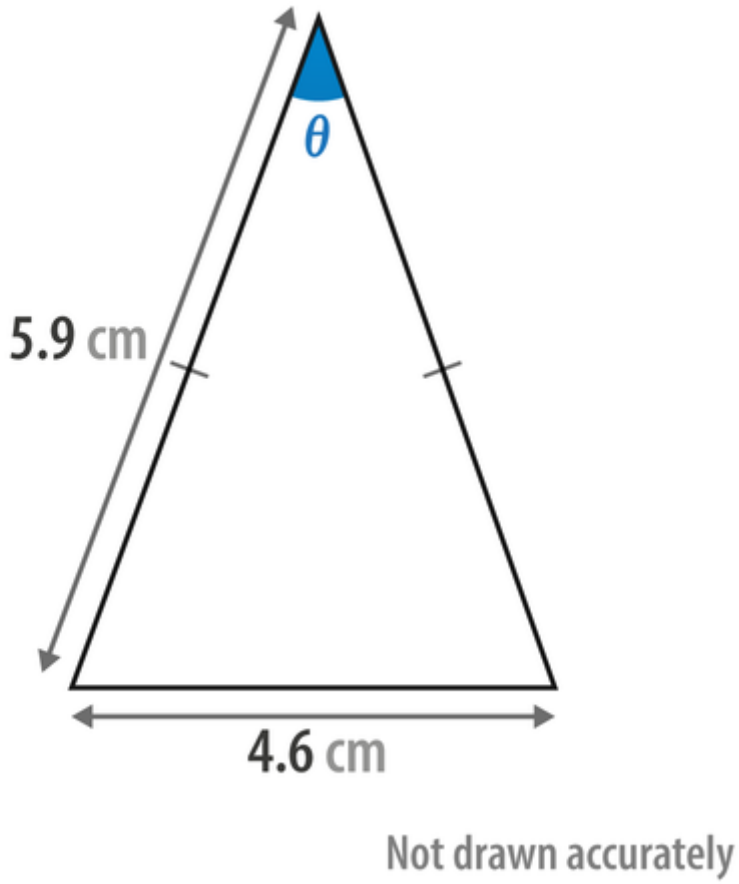

Copyright Sparx 2022

Jessica wants to use her $8.61\ \mathrm{m}$ long ladder against a wall, as shown below.
The instructions state that the angle between her ladder and the ground should be in the range 74° to 77°.

Calculate the maximum distance that the base of her ladder should be placed from the wall.
Give your answer in metres to 2 d.p.

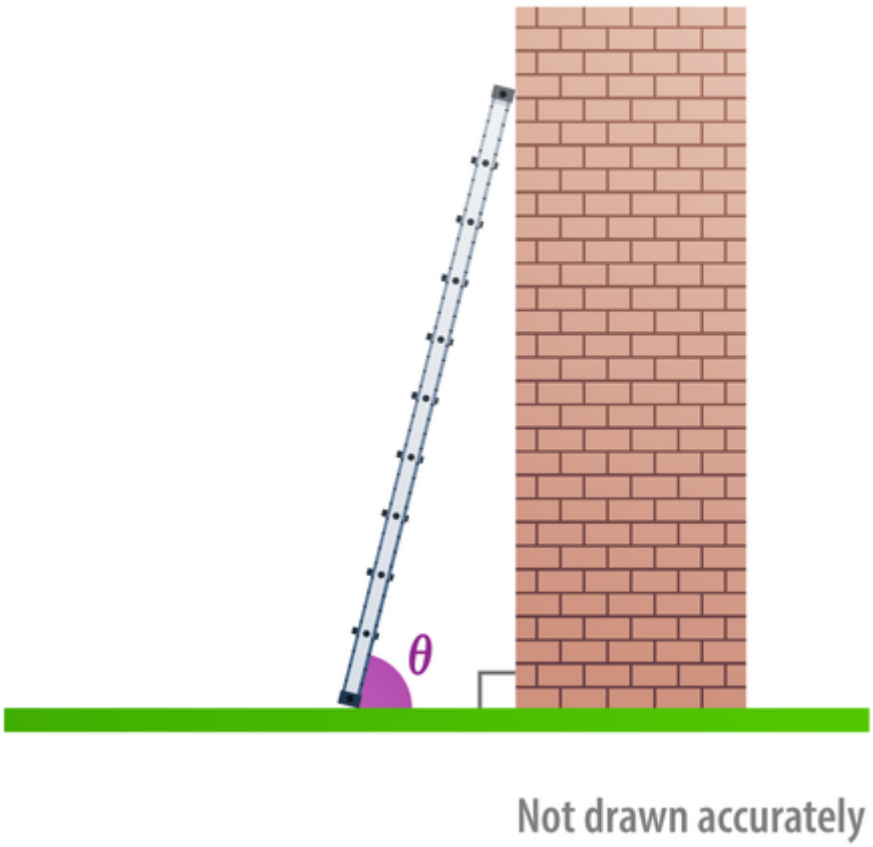

Copyright Sparx 2022

The front of the tent shown in the diagram below is an isosceles triangle.

Calculate the size of angle θ.
Give your answer in degrees to the nearest integer.

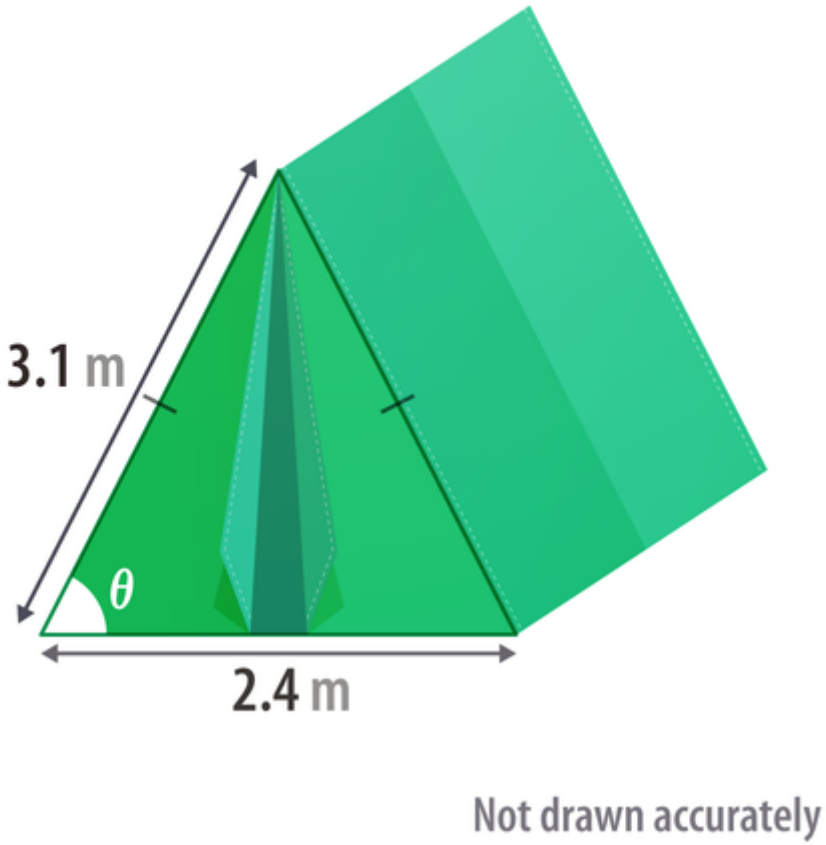

Copyright Sparx 2022

Trigonometry - Sine and cosine rule and use of 0.5absinC

The sine rule B249

All three angles in the triangle below are acute.
Calculate the angle θ to 1 d.p.

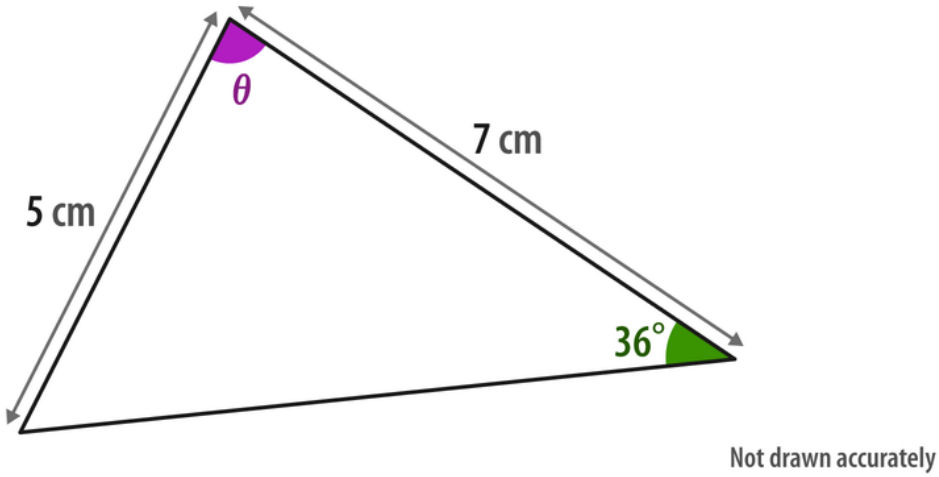

Calculate the length d.

Give your answer to 3 s.f.

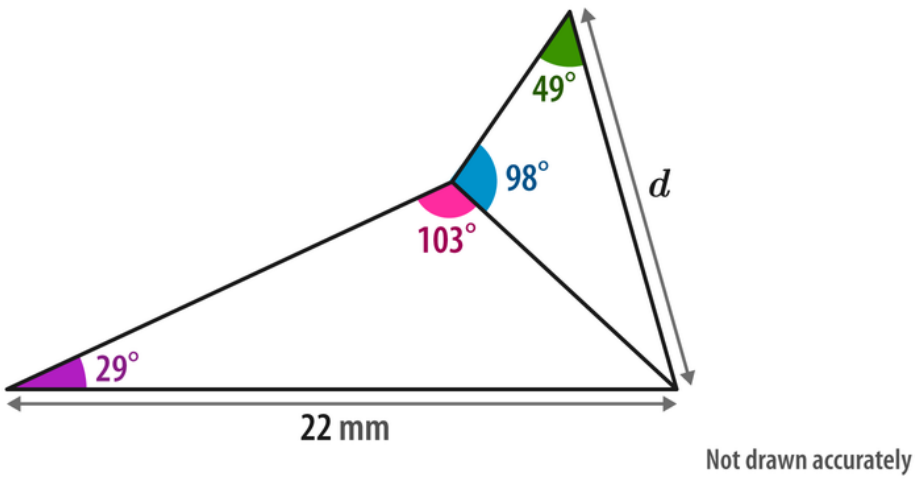

The cosine rule

B642

a) What is the value of $\cos x$?

b) What is the value of $\cos z$?

Give your answers as fractions in their simplest forms.

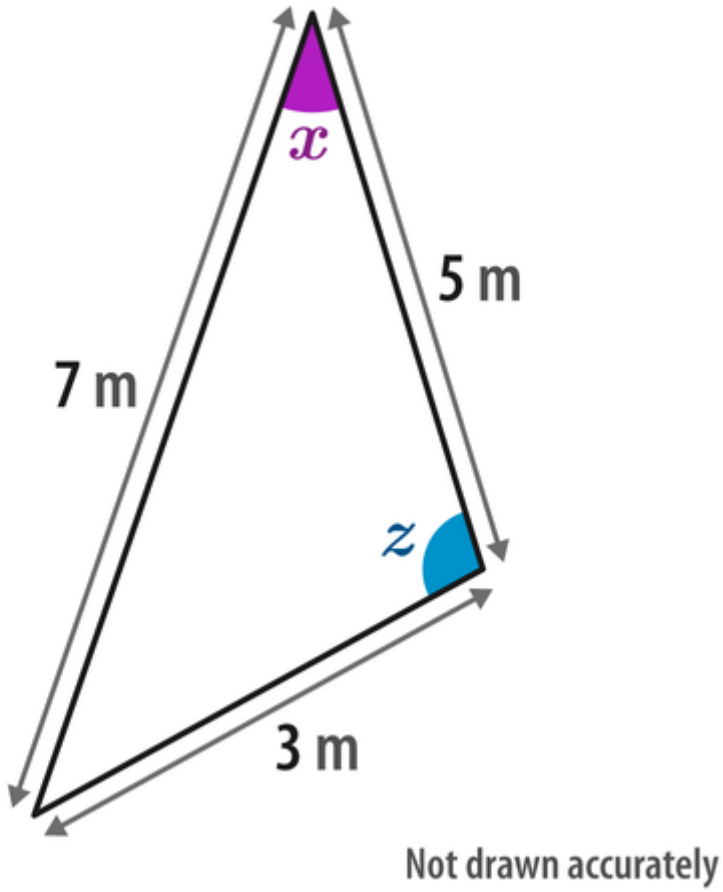

Copyright Sparx 2022

The area rule

B833

The area of the triangle below is $19.8\ \text{cm}^2$.

Work out the size of angle θ, given that it is acute.

Give your answer in degrees $(^\circ)$ to 3 s.f.

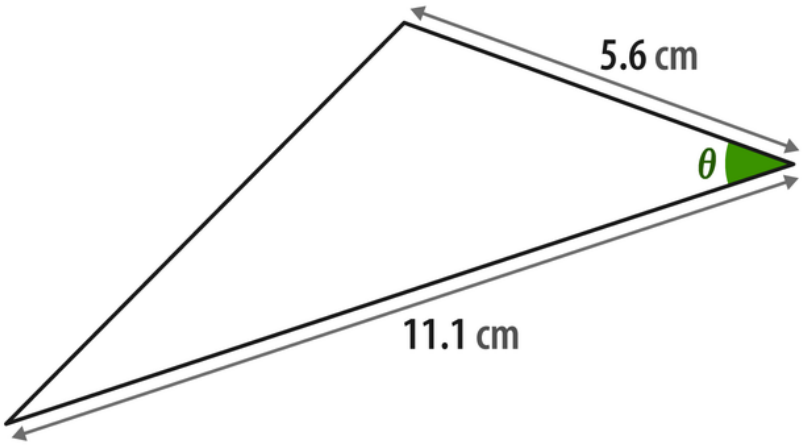

Not drawn accurately

Calculate the area of the parallelogram below.

Give your answer to 1 d.p.

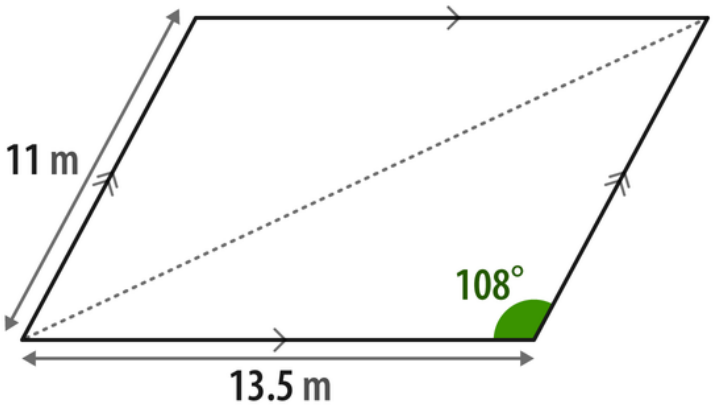

Not drawn accurately

Copyright Sparx 2022