Edexcel B (R)

Mensuration

2022 International GCSE Advance Information

Sparx Topics & Key Questions

We are always looking for ways to support maths teachers and students. In order to help you and your year 11s this year we've pulled together a list of key questions which may be useful to practise with your students based on the exam board topic lists.

These 2 key questions are all taken from our library of over 45,000 high-quality questions in Sparx Maths. If you are a Sparx Maths School then your students can use the Topic Codes provided to search the full content library directly within the independent learning section of Sparx Maths to help target their revision.

Please note this is not an exhaustive topic guide it is simply designed to help you pull together some key questions to use to check for understanding in lessons, starters, or as worksheets with your learners.

Mensuration	Topics	Sparx Topic Codes
In 3-D	Volume of a cylinder	B468
	Volume of a cuboid	B176

Copyright Sparx 2022

In 3-D - Volume of a cylinder

Finding the volume of cylinders B468

The treasure chest below is a prism with a cross-section formed of a rectangle and a semicircle.

Work out the volume of the treasure chest.
If your answer is a decimal, give it to 2 d.p.

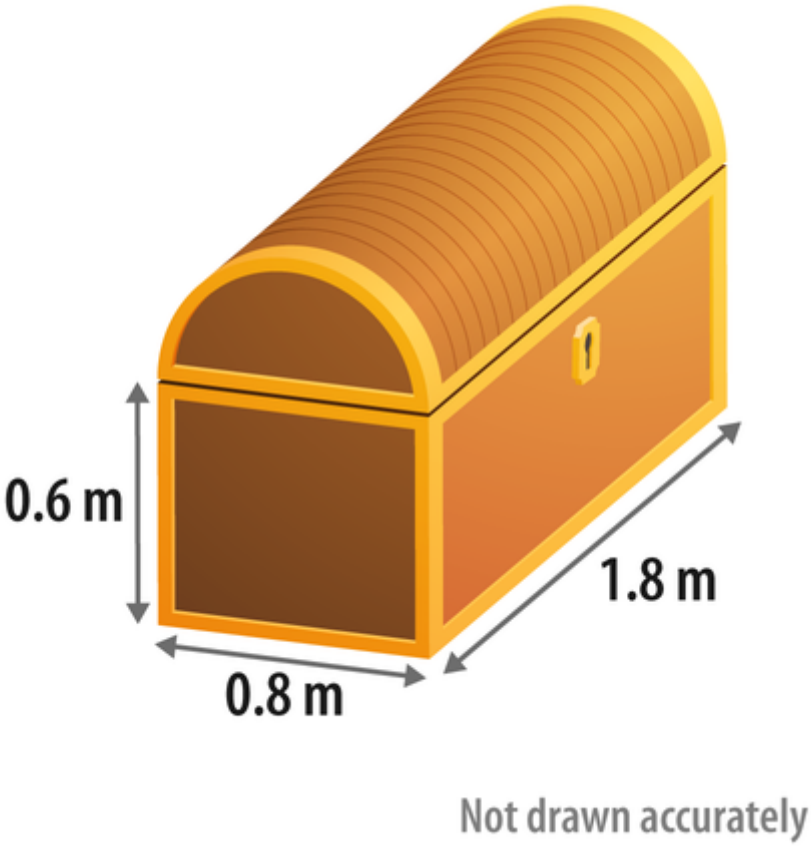

Copyright Sparx 2022

In 3-D - Volume of a cuboid

Finding the volume of cubes and cuboids B176

A sealed cuboid-shaped container is filled with water to a depth of $16\ \mathrm{cm}$.
The container is then rotated as shown below.

What is the new depth of the water?
Give your answer in centimetres (cm), and give any decimal answers to 1 d.p.

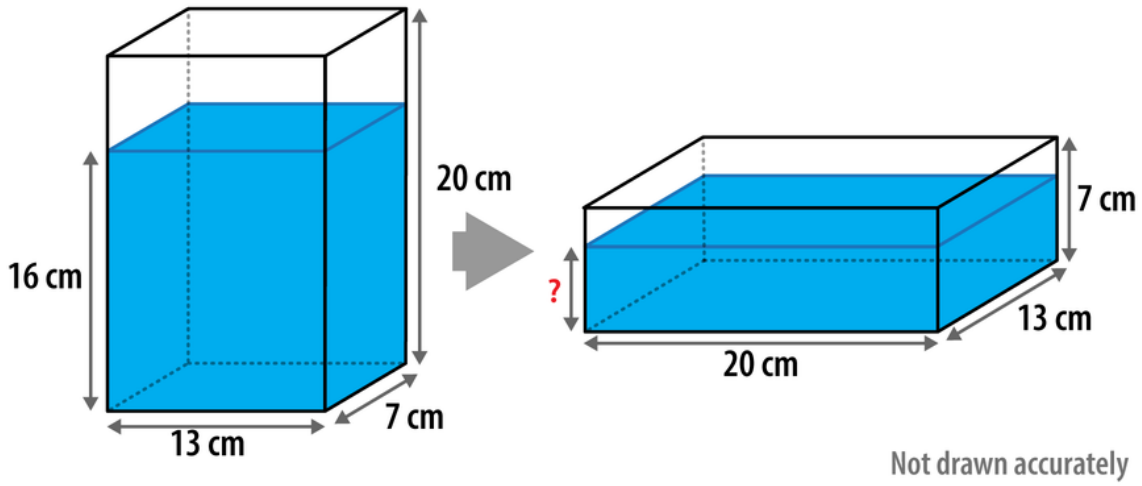

Copyright Sparx 2022