NOTES: UNLESS OTHERWISE SPECIFIED

1. ALL DIMENSIONS ARE IN INCHES.
2. AREA DRAIN BODY MATERIAL: 12GA STAINLESS STEEL T316
3. SPECIFYING ENGINEER IS RESPONSIBLE FOR CONCRETE ENCASEMENT AND REINFORCING BASED UPON APPLICATION AND LOCAL CODES.
4. REFER TO https://info.slotdrainsystems.com/installresources FOR INSTALLATION INSTRUCTIONS.

REVISIONS			
REV	DESCRIPTION	DATE	BY
0	INITIAL RELEASE – R0	4/15/2020	DK
1	UPDATED DRAWING LAYOUT & REBAR DETAILS	7/14/2021	DK

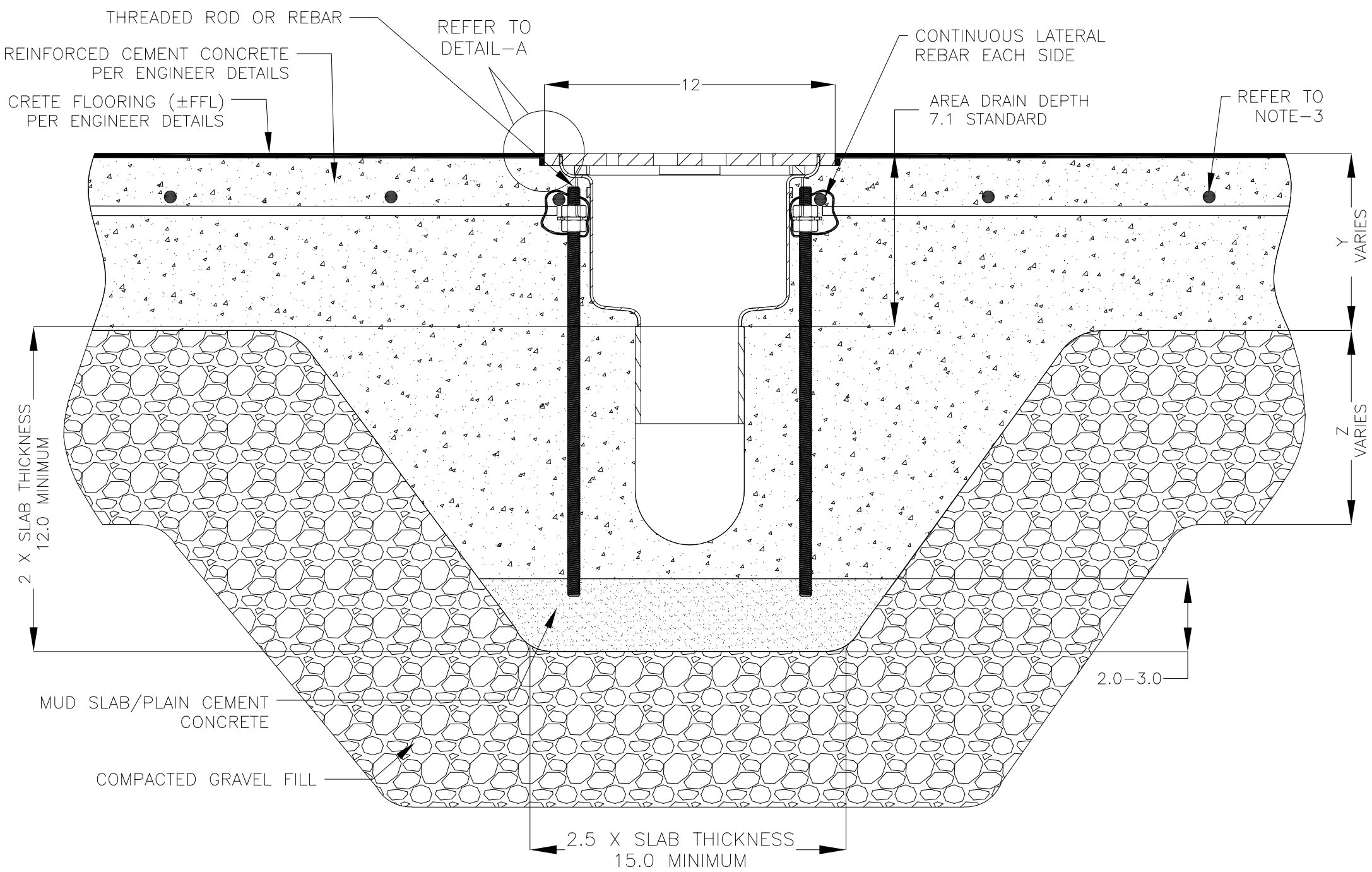

FOOD SAFE SQUARE TOP ROUND AREA DRAIN INSTALLATION DETAILS

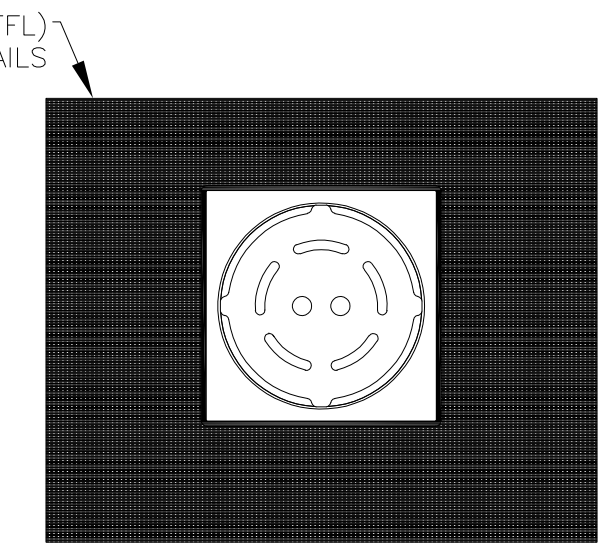

PLAN VIEW

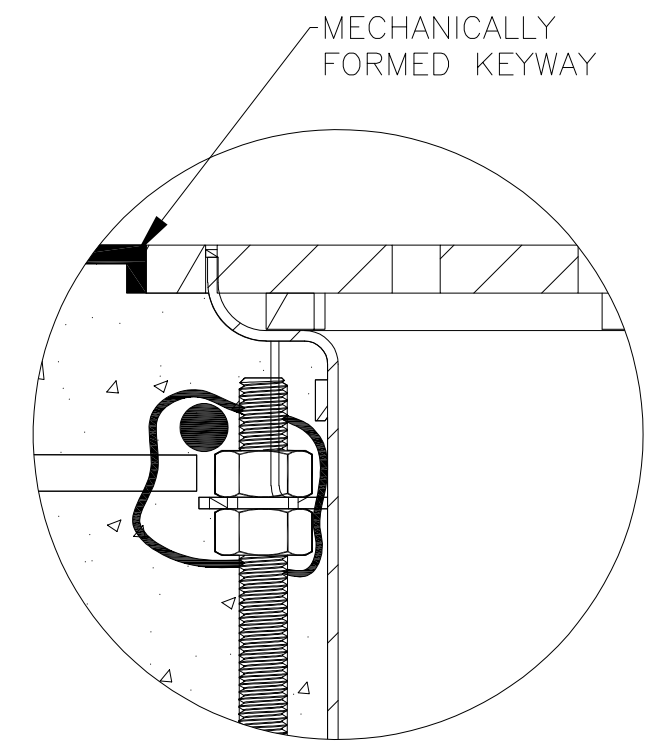

DETAIL–A

SLOTDRAIN® SYSTEMS
855.497.7508
info@slotdrainsystems.com
www.slotdrainsystems.com

DRAWING TITLE: CRETE FLOOR–NEW CONSTRUCTION INSTALLATION

ALL DRAWINGS ARE THE EXCLUSIVE PROPERTY OF SLOT DRAIN SYSTEMS. ANY REPRODUCTION IN PART OR IN WHOLE IS PROHIBITED WITHOUT PROPER CONSENT.

DRAIN SERIES	REV.
FOOD SAFE SQUARE TOP AREA DRAIN	1

DWG NO.	SIZE	SCALE	SHEET
IN–FSADS–001–R1	B	NTS	1 OF 1