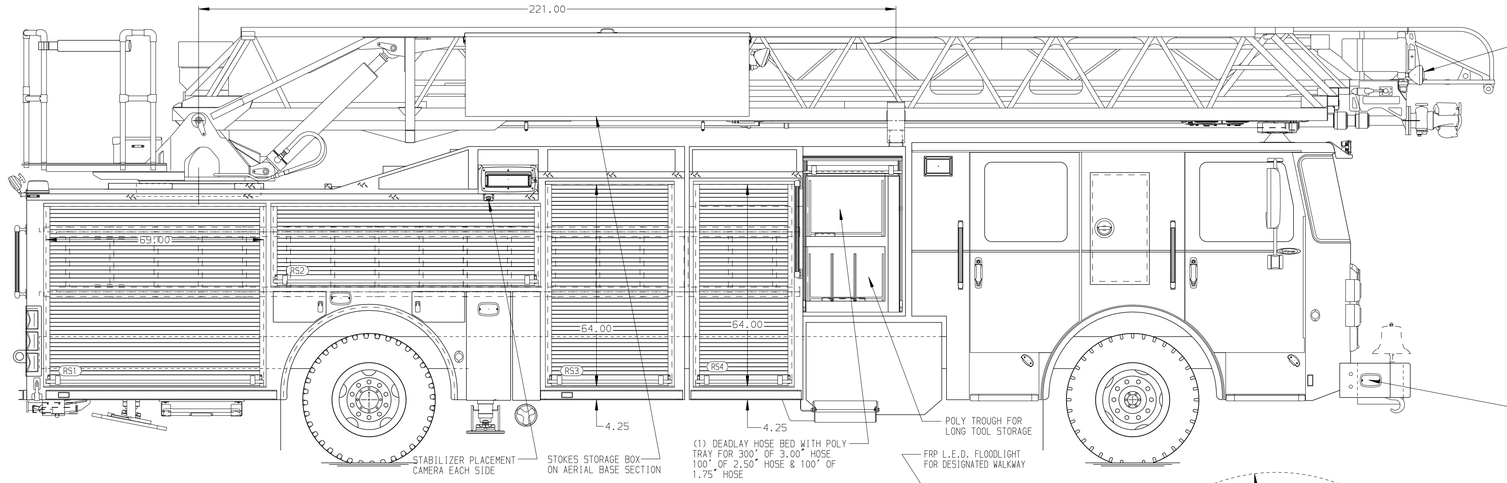

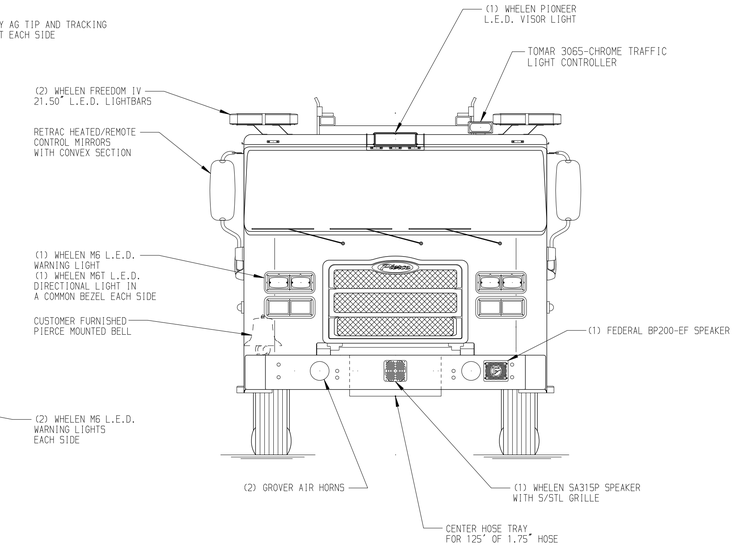

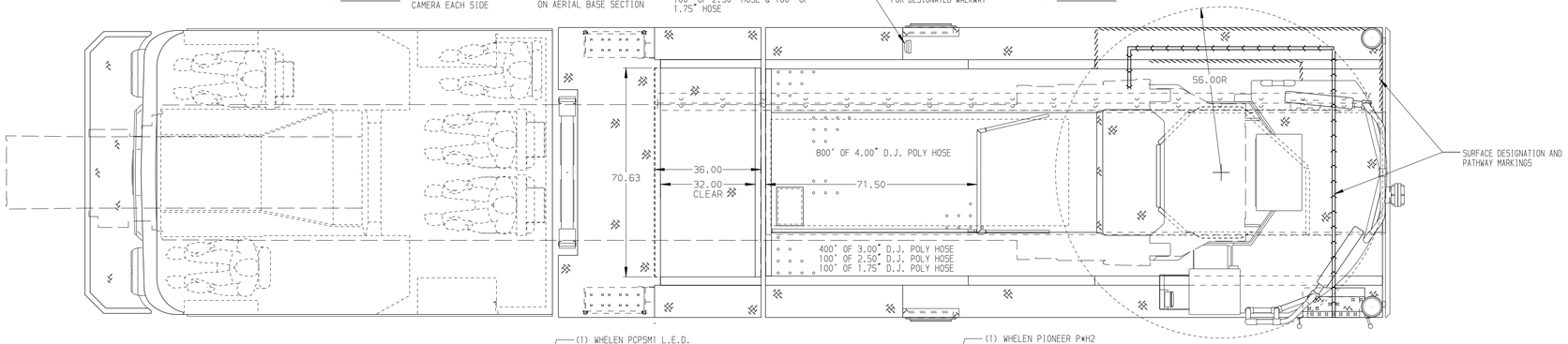

BODY	WATER TANK
107' ASL Aluminum Body PUC	500 Gallon Poly Water Tank
COMPT,LEFT SIDE FRONT	Foam System
Full Height Rollup Forward	Foam System Not Required
COMPT,LEFT SIDE REAR	Foam Cell
Full Height Rollup Rearward	Foam Cell Not Required
COMPT,RIGHT SIDE FRONT	
Full Height Rollup Forward	
COMPT,RIGHT SIDE REAR	
Full Height Rollup Rearward	

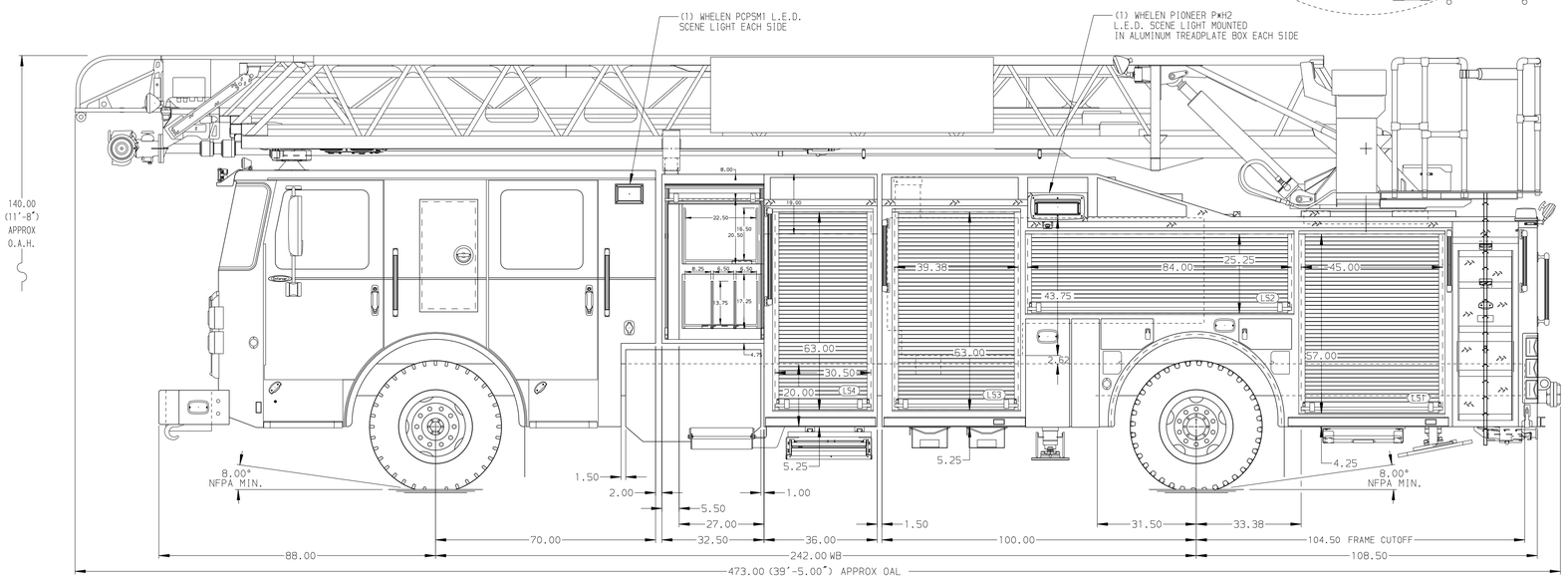

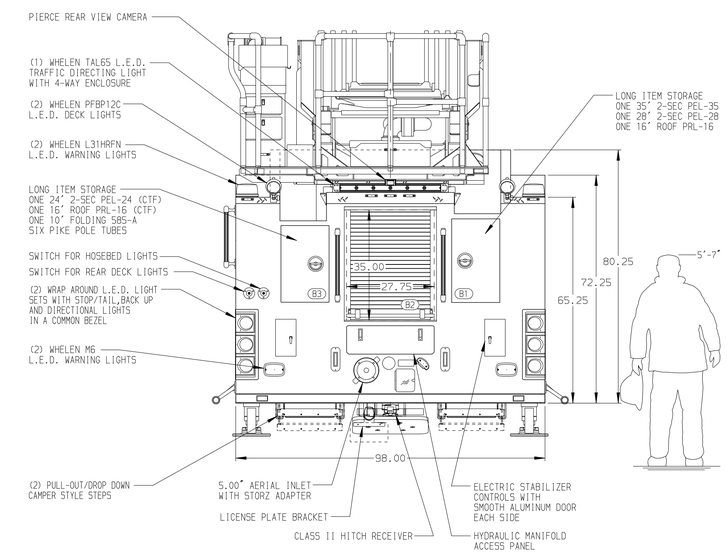

CHASSIS	CAB	AXLE,FRONT,CUSTOM	TRANSMISSION	PUMPHOUSE	CROSSLAYS,1.50"	SPEEDLAYS	SAFETY
Enforcer Chassis, PUC	7000 Enforcer Cab, PUC	22,800 Lb Dana Axle	Allison 5th Gen, 3000 EVS P	Control Zone, PAL/PAP PUC	(2) 1.50",Full Width Trays,200'	Speedlays Not Required	Side Roll and Frontal Impact Protection
ENGINE	BUMPER	AXLE,REAR		PUMP	UPPER DEADLAY	GENERATOR	
450 HP Cummins L9 Engine	19" Extended Painted Steel	33,500 Lb Meritor Axle		1500 GPM Pierce PUC	(1),Full Width Tray	Generator Not Required	

NOTE

DIMENSIONS SHOWN ARE APPROXIMATE AND ARE SUBJECT TO MINOR DEVIATIONS AS MAY OCCUR OR BE NECESSARY IN CONSTRUCTION.
MINOR DETAILS NOT SHOWN.

1. ONE 1.50 OUTLET WITH 2.00 PIPING AND SWIVEL LOCATED IN CENTER BUMPER TRAY
2. SHORELINE RECEPTACLE WITH KUSSMAUL SUPER AUTO-EJECT LOCATED DRIVER'S SIDE OF CREW CAB
3. AIR INLET WITH DISCONNECT COUPLING IN THE DRIVER SIDE STEPWELL
4. AIR OUTLET WITH SHUT OFF VALVE LOCATED ON THE DRIVER'S SIDE PUMP PANEL
5. BATTERY CHARGER LOCATED IN COMPARTMENT PER SHOP ORDER
6. BATTERY CHARGE INDICATOR LOCATED ON THE DRIVER SIDE SEAT RISER
7. SEVEN ADJUSTABLE SHELVES IN COMPARTMENTS PER SHOP ORDER
8. THREE FLOOR MOUNTED SLIDE-OUT TRAYS IN COMPARTMENTS PER SHOP ORDER
9. ONE PAC TRAC ON BACK WALL OF COMPARTMENT PER SHOP ORDER
10. DUAL L.E.D. LIGHT STRIPS LOCATED ON THE FRONT OF THE HOSEBED
11. TWO 120V RECEPTACLES IN CAB PER SHOP ORDER
12. NON-RAISED AERIAL PEDESTAL
13. 1500 GPM HIGH FLOW WATERWAY
14. NO LIMITED RETRACTION REQUIRED

REV	DATE	BY	CH
1	29MAY20	TKA	CWI

CHASSIS DATA
MAKE: PIERCE
MODEL: ENFORCER

Pierce MANUFACTURING INC.

TITLE: 107' ASCENDANT AERIAL LADDER AND BODY ASSEMBLY
FOR: ELGIN FIRE DEPARTMENT, ELGIN, ILLINOIS
DWG NO.: 35087AD

JOB NO.	SCALE	DRAWN BY	CHECKED BY	SHEET SIZE	SHEET NO.
35087	1:24	TKA	CRI	D	1 OF 1

DATE: 22APR20 (DRAWN BY) 22APR20 (CHECKED BY)

View File Created 29-MAY-2020 09:02:55