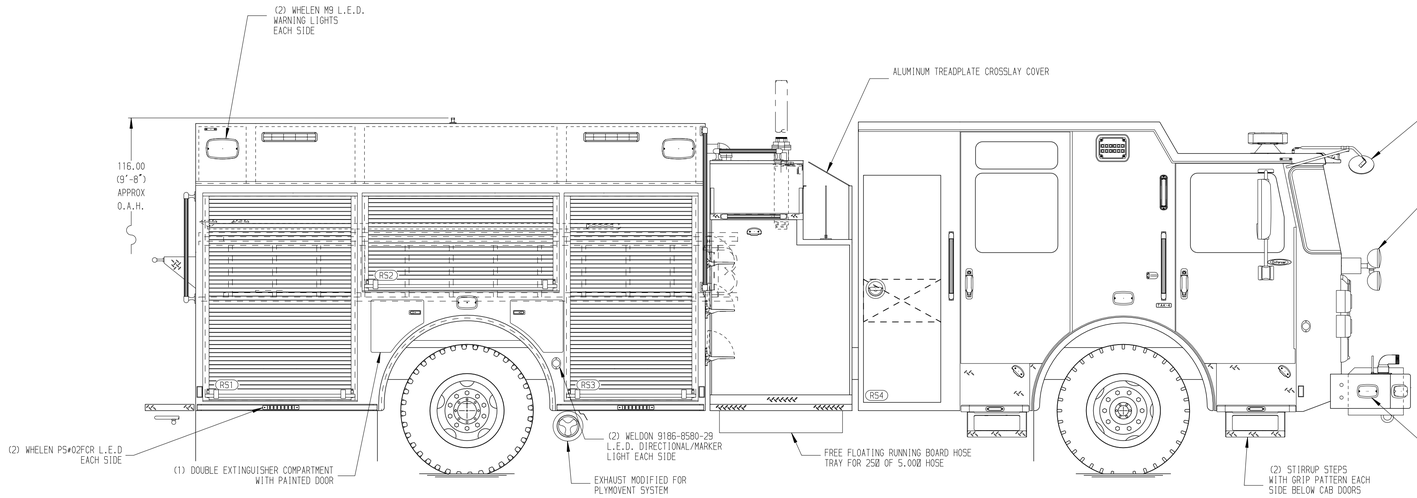

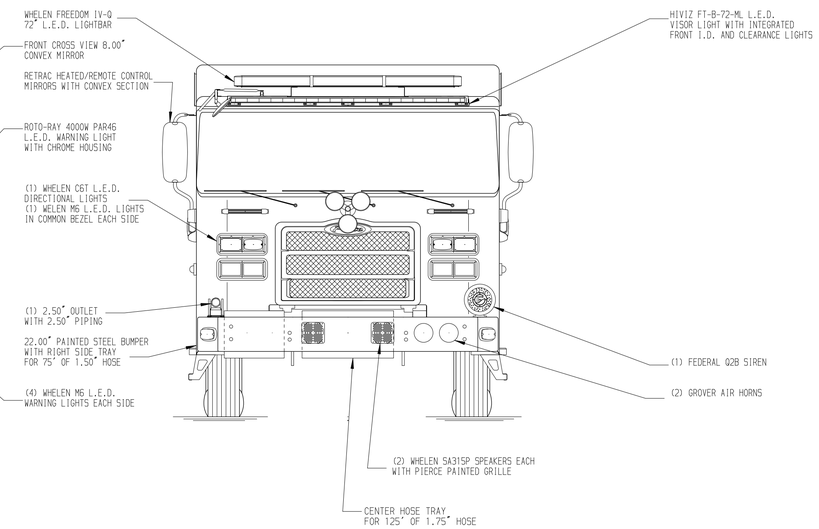

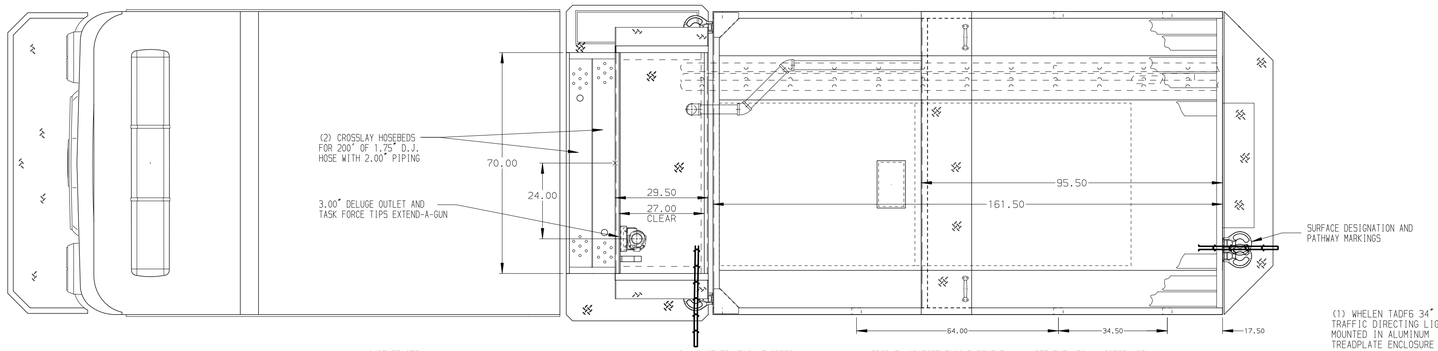

HOSEBED CAPACITIES

1. OPEN
2. 400' OF 1.75" D.J. POLY HOSE
3. 250' OF 2.50" D.J. POLY HOSE
4. 1000' OF 5.00" D.J. POLY HOSE
5. 400' OF 3.00" D.J. POLY HOSE

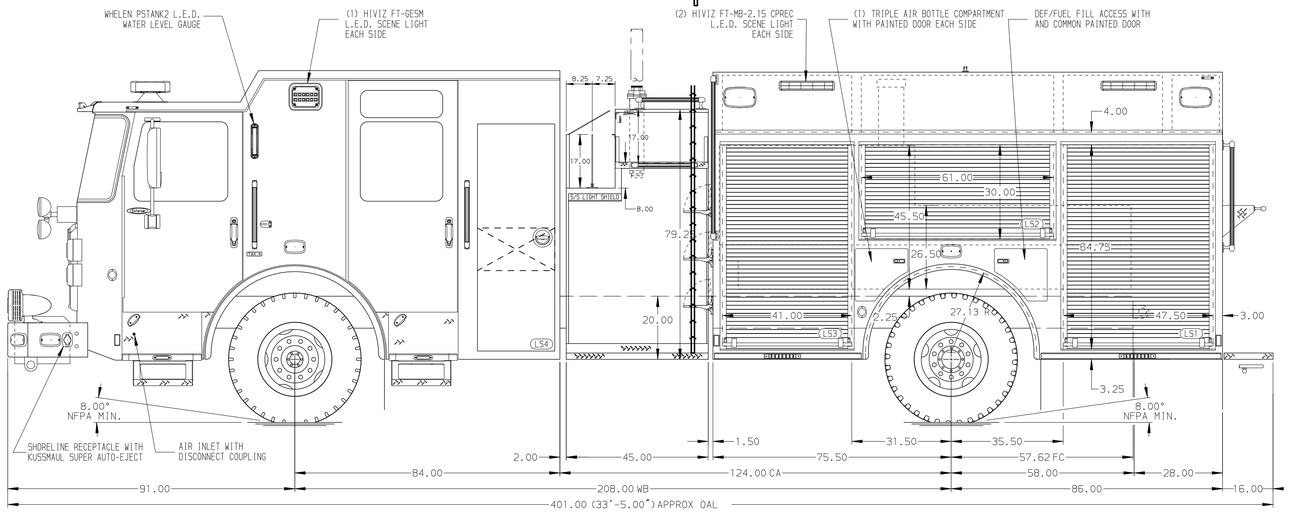

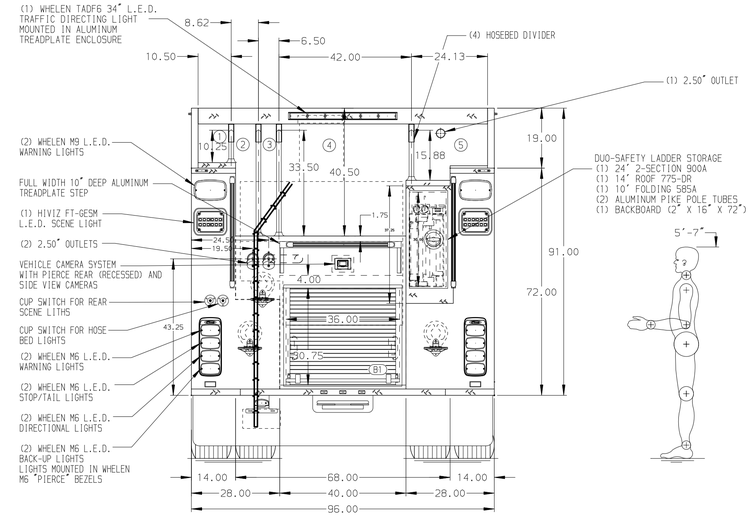

ALUMINUM BODY

NOTE

DIMENSIONS SHOWN ARE APPROXIMATE AND ARE SUBJECT TO MINOR DEVIATIONS AS MAY OCCUR OR BE NECESSARY IN CONSTRUCTION.
MINOR DETAILS NOT SHOWN.

1. BATTERY CHARGER LOCATED BEHIND THE DRIVER'S SEAT
2. BATTERY CHARGER INDICATOR LOCATED ON DRIVER'S SEAT RISER
3. DUAL L.E.D. LIGHT STRIPS LOCATED IN HOSE BED
4. DUAL L.E.D. LIGHT STRIPS LOCATED ON THE FRONT OF THE HOSEBED
5. ELASTIC PULL STRAP ON DOOR IN ALL SIDE COMPARTMENT DOORS
6. DRIP PAN GUARD FOR ROLL-UP DOOR LOCATED ON LS1, LS2, LS3, RS1, RS2, RS3, AND B1
7. ONE FULL WIDTH/DEPTH ADJUSTABLE SHELF IN COMPARTMENTS; LS3, RS2, RS3, B1, TWO IN LS1 AND RS1
8. ONE FLOOR MOUNTED SLIDE-OUT TRAY IN COMPARTMENTS; RS1 AND LS1
9. ONE SWING-OUT ALUMINUM TOOL BOARD IN COMPARTMENT LS2
10. CTECH DRAWER ASSEMBLY IN COMPARTMENT LS3 ON TOP OF FALSE FLOOR
11. ONE ALUMINUM MOUNTING PLATE IN COMPARTMENTS; RS1, RS2, RS3, LS1, LS2, AND LS3
12. 1.00" RETAINING LIP IN COMPARTMENT RS2
13. ZIAMATIC SAC-44-E FOLDING WHEEL CHOCKS IN COMPARTMENT RS3 UNDER FALSE FLOOR

REV	DATE	BY	CH
3	17NOV21	JUS	JGO
2	16AUG21	JUS	PJP
1	08JUL21	JUS	PJP
0	26MAR21	JUS	EGO

CHASSIS DATA	
MAKE	PIERCE
MODEL	ENFORCER
TITLE	2000-D-750P, 750 GAL WATER TANK, 161" PUMPER BODY (2) CROSSLAYS, DELUGE, LADDERS BETWEEN TANK & SS
FOR	MAULDIN FIRE DEPARTMENT MAULDIN, SOUTH CAROLINA
DWG NO.	36111AD

Pierce MANUFACTURING INC.

JOB NO.	36111
SCALE	1:24
DATE	
DRAWN BY	JUS 11MAR21
CHECKED BY	COL 17MAR21
SHEET SIZE	D
SHEET NO.	1 OF 1

View File Created 17-NOV-2021 10:10:30