RIGHT SIDE COMPARTMENTS CONTAIN THE FOLLOWING:

COMPARTMENT RS1 CONTAINS:
- (1) 4-DRAWER C-TECH CABINET
- (3) STD DEPTH ADJ SHELVES
- (1) VERTICAL COMPARTMENT DIVIDER
- (1) STD DEPTH FLOOR MOUNTED TRAY
- PEGBOARD MOUNTED ON RIGHT WALL
- (1) ELECTRIC CORD REEL WITH 150' OF 10/3 YELLOW CORD
- (1) TOOL AIR REEL WITH 150' OF HOSE
-
-

COMPARTMENT RS2 CONTAINS:
- (1) STD DEPTH ADJ SHELF
-
-

COMPARTMENT RS3 CONTAINS:
- (1) STD DEPTH ADJ SHELF
- (1) VERTICAL COMPARTMENT DIVIDER
- (2) STD DEPTH ADJ SLIDE OUT TOOLBOARDS
- (1) STD DEPTH FLOOR MOUNTED TRAY
- (1) REAR WALL COMPARTMENT DIVIDER

COMPARTMENT RS4 CONTAINS:
- (1) CAB LIFT CONTROLLER
- (3) STD DEPTH ADJ SHELVES
- (1) VERTICAL COMPARTMENT DIVIDER
- (1) STD DEPTH FLOOR MOUNTED TRAY
- (1) RACK FOR 4 EXTINGUISHERS
- (1) 15/20A,120V DUPLEX RECEPTACLE
- (1) REAR WALL COMPARTMENT DIVIDER

COMPARTMENT RS5 CONTAINS:
- (1) STREAMLIGHT FIRE VULCAN HANDLIGHT
- (2) ZICO SCBA BRACKETS
-
-

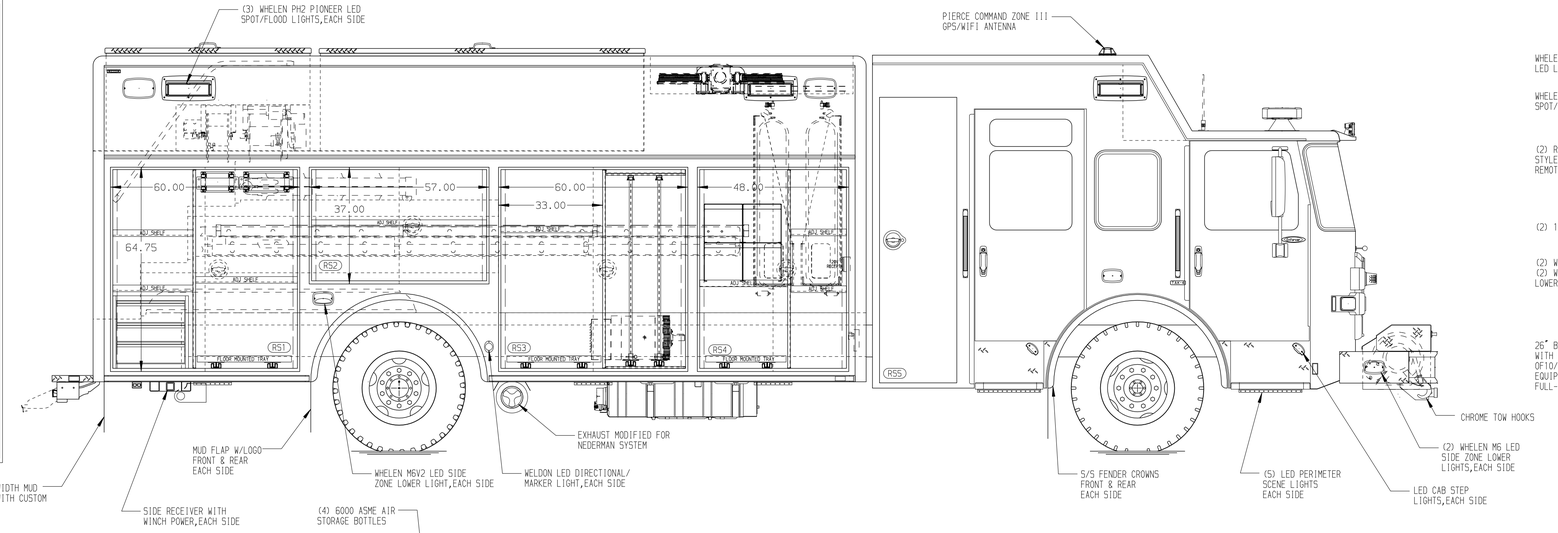

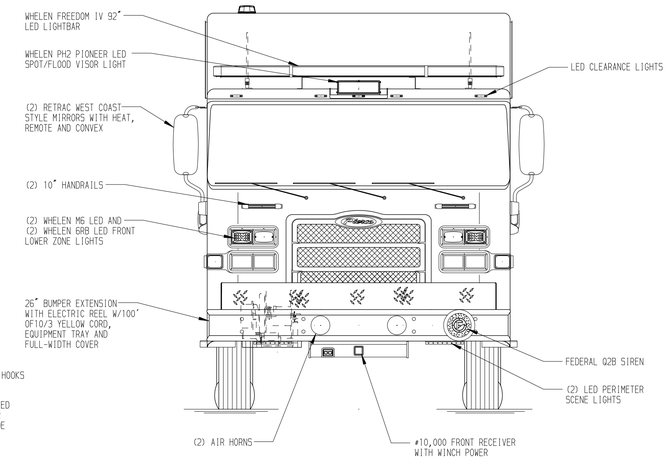

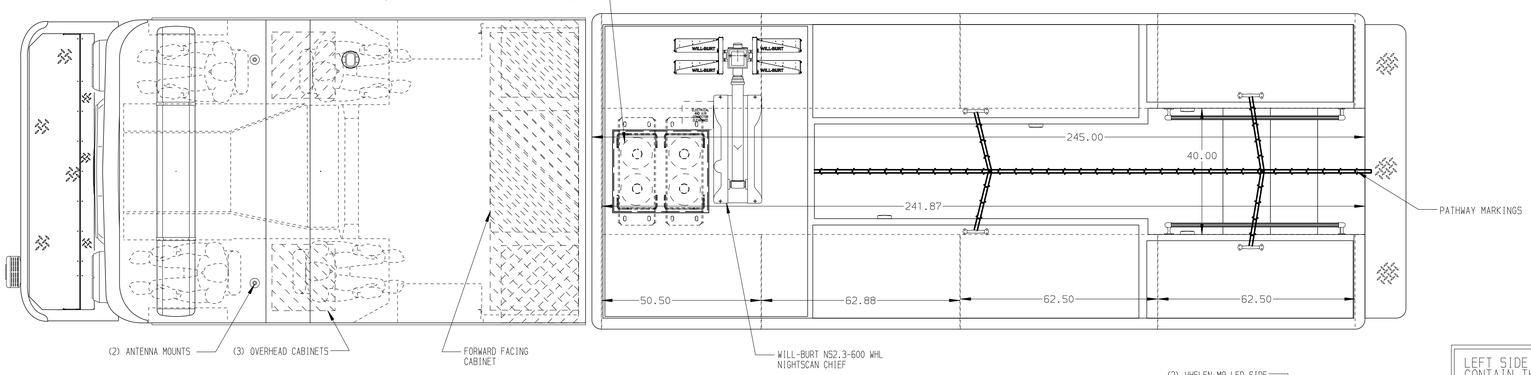

REAR COMPARTMENT CONTAINS THE FOLLOWING:

COMPARTMENT B1 CONTAINS:
-
-
-
-

COMPARTMENT B2 CONTAINS:
- (1) STOKES BASKET RACK
-
-
-

COMPARTMENT B3 CONTAINS:
- (1) RACK FOR 24'2-SECTION LADDER
- (1) RACK FOR 14' ROOF LADDER
- (1) RACK FOR 10' FOLDING LADDER
- (1) RACK FOR 8 PIKE POLES

COMPARTMENT B4 CONTAINS:
- (1) RACK FOR LITTLE GIANT LADDER
- (1) BACKBOARD RACK
-
-

LEFT SIDE COMPARTMENTS CONTAIN THE FOLLOWING:

COMPARTMENT LS1 CONTAINS:
- (1) STD DEPTH ADJ SLIDE OUT TOOLBOARD
- (1) VERTICAL COMPARTMENT DIVIDER
- (1) 4-DRAWER TOOL CABINET
- (1) STD DEPTH ADJ SHELF
- (1) ELECTRIC CORD REEL WITH 150' OF 10/3 YELLOW CORD
- (1) TOOL AIR REEL WITH 150' OF HOSE

COMPARTMENT LS2 CONTAINS:
- (1) STD DEPTH ADJ SHELF
-
-

COMPARTMENT LS3 CONTAINS:
- (1) STD DEPTH ADJ SHELF
- (1) RACK FOR 7 AIR BAGS AND (2) STORAGE RACKS
- (1) STD DEPTH ADJ SLIDE OUT TRAY
- (1) STD DEPTH FLOOR MOUNTED TRAY
- (1) 15/20A,120V DUPLEX RECEPTACLE
- (1) REAR WALL COMPARTMENT DIVIDER
-

COMPARTMENT LS4 CONTAINS:
- (1) CIRCUIT BREAKER PANEL
- (1) GENERATOR METER PANEL
- (1) SUB FEED BOX
- (1) CASCADE SYSTEM CONTROL PANEL
- (1) "SPACESAVER"2-BOTTLE FILL ENCLOSURE
- (1) RACK FOR 9 SCBA BOTTLES
- (1) VERTICAL COMPARTMENT DIVIDER
- (1) NIGHT SCAN CONTROLLER
- (2) 15/20A,120V DUPLEX RECEPTACLES
- (1) REAR WALL COMPARTMENT DIVIDER

COMPARTMENT LS5 CONTAINS:
- (1) STREAMLIGHT FIRE VULCAN HANDLIGHT
- (2) ZICO SCBA BRACKETS
-
-

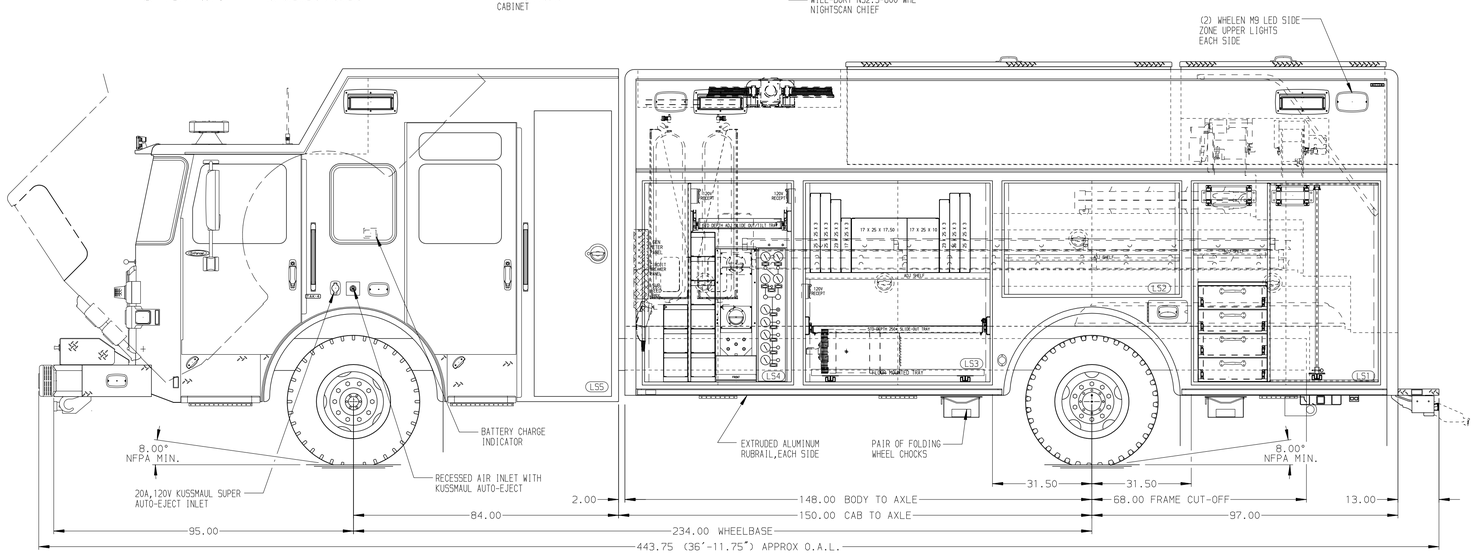

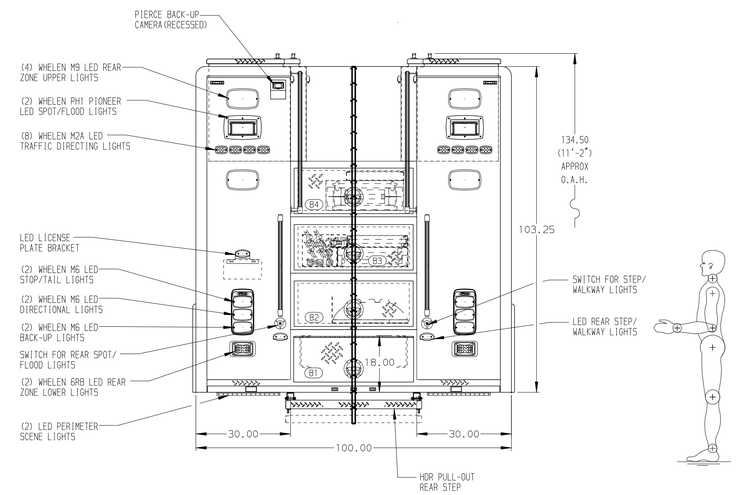

NOTE

DIMENSIONS SHOWN ARE APPROXIMATE AND ARE SUBJECT TO MINOR DEVIATIONS AS MAY OCCUR OR BE NECESSARY IN CONSTRUCTION.
MINOR DETAILS NOT SHOWN.

NOTES:
1. ONAN 30kW SINGLE PHASE PTO DRIVEN GENERATOR WITH SPLASH GUARD LOCATED BETWEEN THE FRAME RAILS
2. FLOOR IN CAB AND CREW CAB TO BE PADDED RUBBER
3. SIGTRONICS 4-POSITION INTERCOM SYSTEM
4. KUSSMAUL PUMP PLUS 1200 CHARGER LOCATED BEHIND DRIVER'S SEAT
5. POLISHED S/S ON BODY DOOR FRAMES AND INSIDE EACH COMPARTMENT DOOR
6. PIERCE LED LIGHTS IN ALL BODY AND HATCH COMPARTMENTS
7. ADDITIONAL LOUVERS IN COMPARTMENTS RS2 AND RS3
8. TURTLE TILE MATTING ON COMPARTMENT FLOORS IN RS1,RS2,RS3,RS4,LS1,LS2,LS4, AND HATCH COMPARTMENTS
9. 15/20A,120V RECEPTACLES IN CAB,(2) IN EMS CABINET AND (1) IN FORWARD FACING OVERHEAD CABINET

NOTE:
LAP DOORS HAVE BEEN SHOWN IN HIDDEN LINES TO CLEARLY IDENTIFY THE EQUIPMENT IN EACH COMPARTMENT. DASHED LINES ON SIDES ARE DOORS IN OPEN POSITION

CLEAR DOOR WIDTH KEY

AMDOR ROLL UP DOORS:	-2 1/4"
GORTITE ROLL UP DOORS:	-2 1/2"
PIERCE DOUBLE LAP DOORS:	-4 1/4"
PIERCE LIFT-UP LAP DOORS:	-1 1/2"

(EX: 60"F-F - 2 1/4"= 57 3/4" CLEAR)
(F-F)= FRAME TO FRAME

SIDE ROLL AND FRONTAL IMPACT PROTECTION

REV	DATE	BY	CH
0	07SEP21	DHE	CDK
1	29JUN21	DHE	CDK
2	10MAY21	DHE	CDK

CHASSIS DATA
MAKE: PIERCE
MODEL: EN8424

Pierce MANUFACTURING INC.

TITLE: HEAVY DUTY RESCUE NON-WALKIN
FOR: YORK CENTER FIRE PROTECTION DISTRICT BID #593 VINCE BAUDEK
DWG NO.: 36109AD

JOB NO.	36109
SCALE	1:24
DATE	26APR21
DRAWN BY	DHE
CHECKED BY	CDK 27APR21
SHEET SIZE	D
SHEET NO.	1 OF 1

View File Created 07-SEP-2021 11:41:26