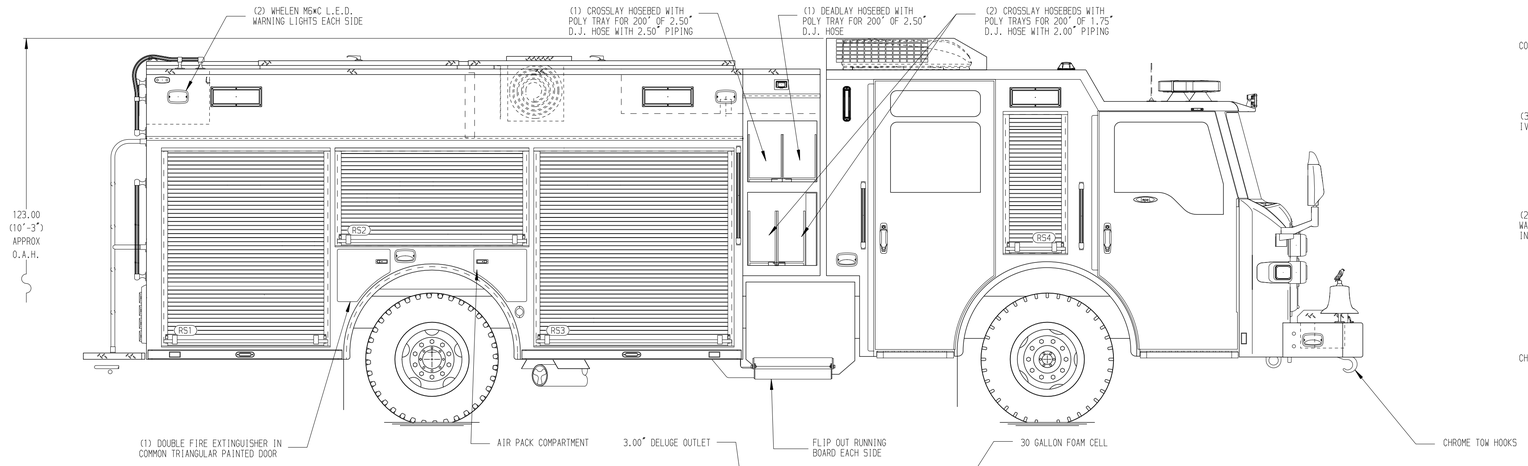

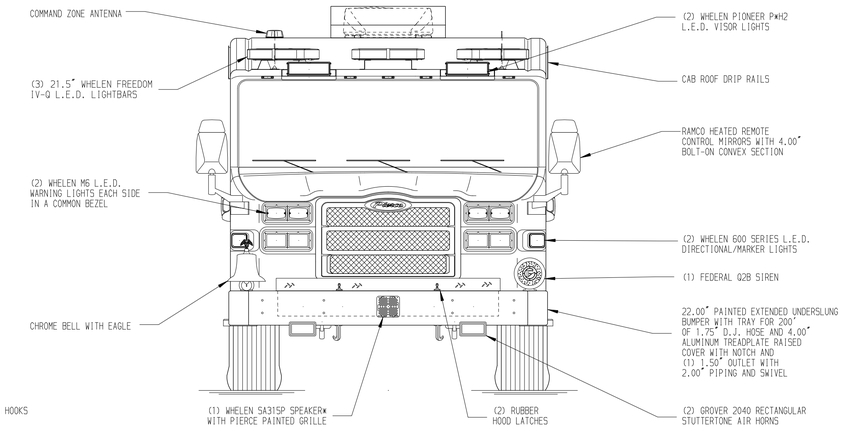

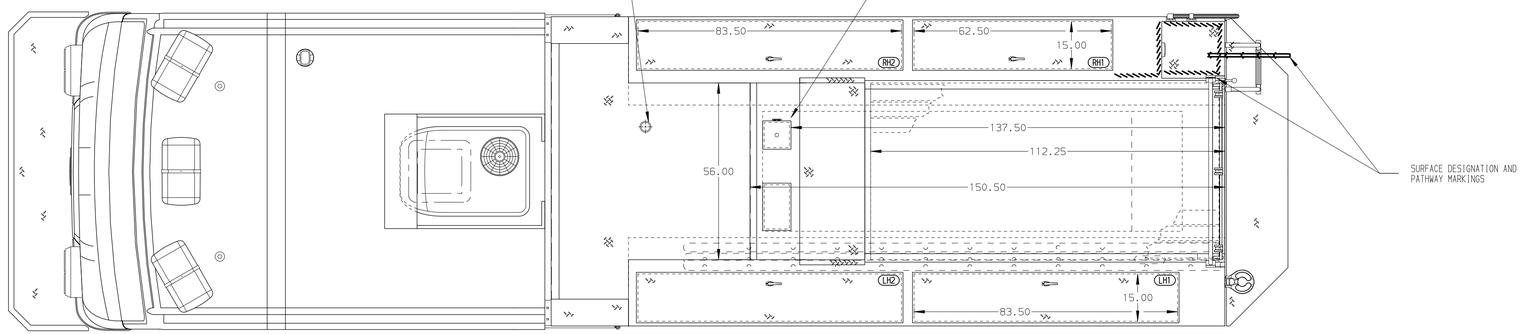

HOSEBED CAPACITIES

① - 1050' OF 5.00" L.D. HOSE
② - 200' OF 3.00" D.J. HOSE

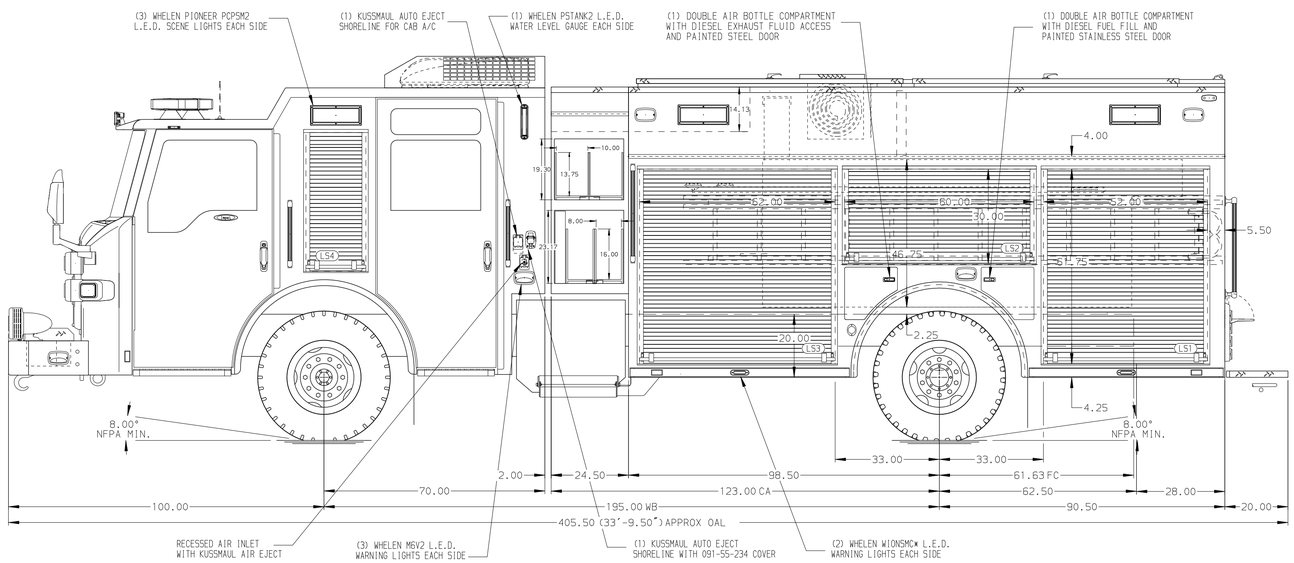

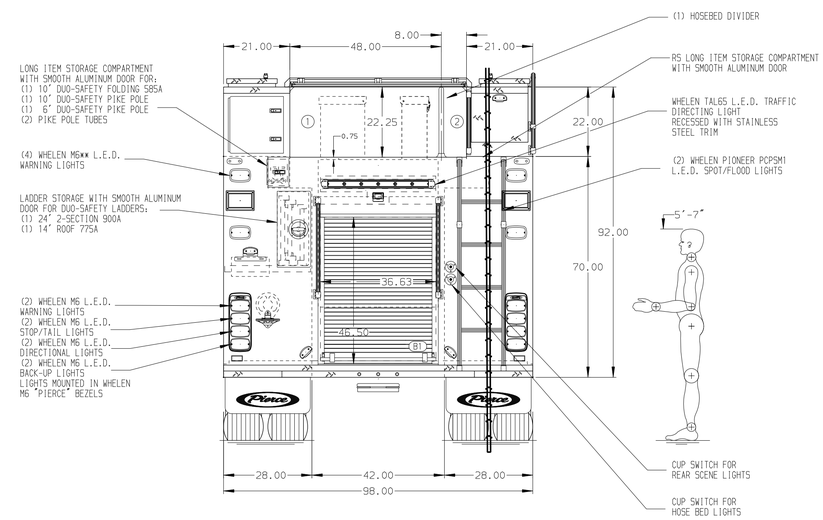

ALUMINUM BODY

FRONTAL IMPACT PROTECTION

NOTE

DIMENSIONS SHOWN ARE APPROXIMATE AND ARE SUBJECT TO MINOR DEVIATIONS AS MAY OCCUR OR BE NECESSARY IN CONSTRUCTION.
MINOR DETAILS NOT SHOWN.

1. VOGEL LUBE SYSTEM PUMP LOCATED PER SHOP ORDER
2. BATTERY CHARGER LOCATED BEHIND DRIVER SEAT
3. DUAL L.E.D. LIGHT STRIPS LOCATED IN HOSE BED
4. TWO FULL WIDTH/DEPTH ADJUSTABLE SHELF IN COMPARTMENT RS1, RS3, ONE IN LS1, LS2, LS3, RS2 AND B1
5. ONE FLOOR MOUNTED SLIDE-OUT TRAY IN COMPARTMENT RS1, LS1 AND B1
6. ALUMINUM SLIDE-OUT TOOLBOARD IN COMPARTMENT RS1
7. ONE SWING-OUT ALUMINUM TOOL BOARD IN COMPARTMENT LS2
8. ALL FOLDING STEPS TO BE TRIDENT WITH INTEGRATED L.E.D. LIGHT UNLESS SPECIFIED
9. 120V DUPLEX RECEPTACLE LOCATED IN RS1, RS4 AND LS4
10. AIR OUTLET WITH SHUT-OFF VALVE ON DS PUMP PANEL

REV	DATE	BY	CH
7	16AUG21	JJB	JJR
6	16AUG21	JJB	JJR
5	12JUL21	JJB	JJR
4	09JUL21	JJB	JJR
3	11MAR21	JJB	EGO

CHASSIS DATA
MAKE: PIERCE
MODEL: IMPEL FR

Pierce MANUFACTURING INC.

TITLE: 1500-D-780P, 750G WATER W/30G FOAM, 189" RESCUE PUC (3) CROSSLAYS, LADDER THRU BODY, 3" DELUGE

FOR: CITY OF NAPLES, NAPLES, FLORIDA

DWG NO.: 36058AD

JOB NO.	36058
SCALE	1:24
DATE	
DRAWN BY	JJB
10FEB21	
CHECKED BY	EGO
25FEB21	
SHEET SIZE	D
SHEET NO.	1 OF 1

View File Created 17-AUG-2021 07:00:29