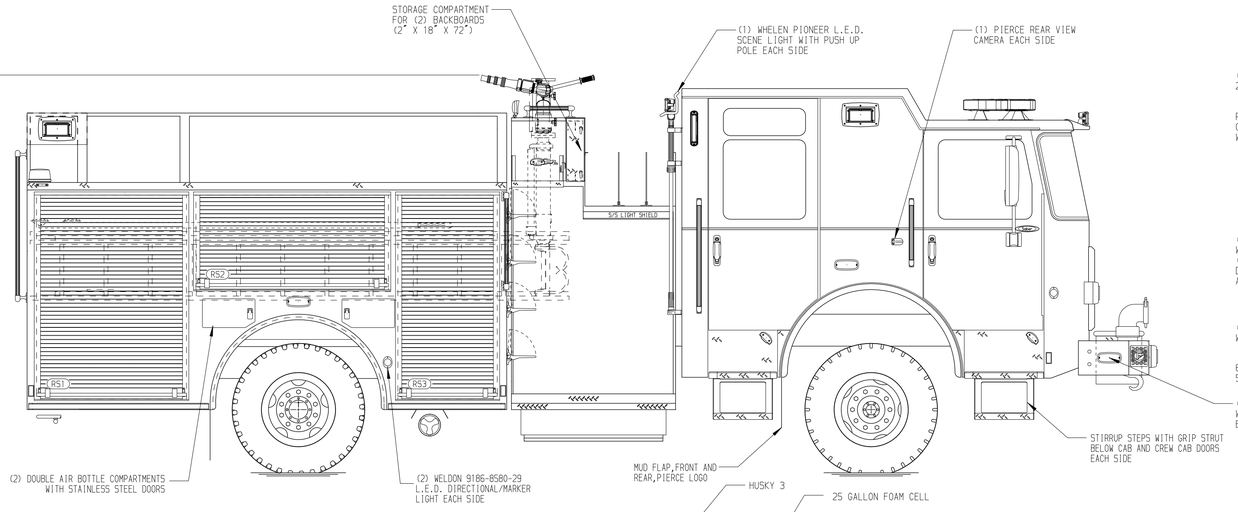

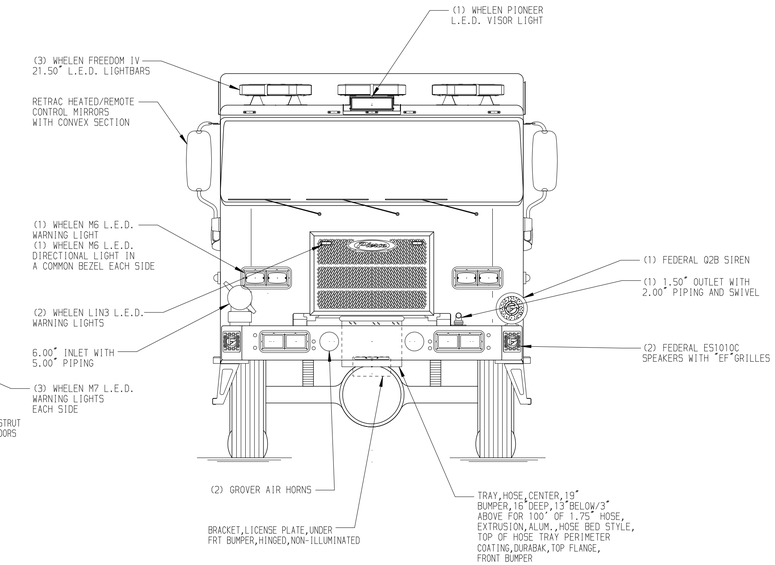

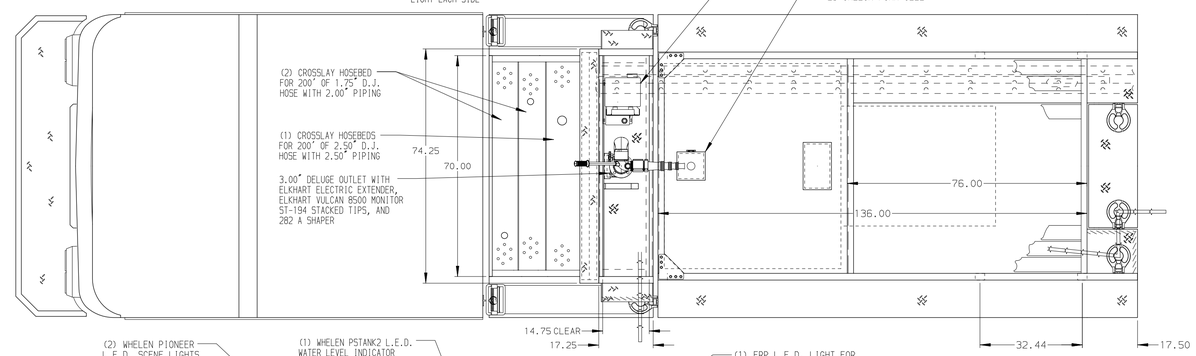

HOSEBED CAPACITIES

1. 400' OF 3.00" D.J. HOSE
2. 1000' OF 5.00" D.J. HOSE
2. 200' OF 3.00" D.J. HOSE

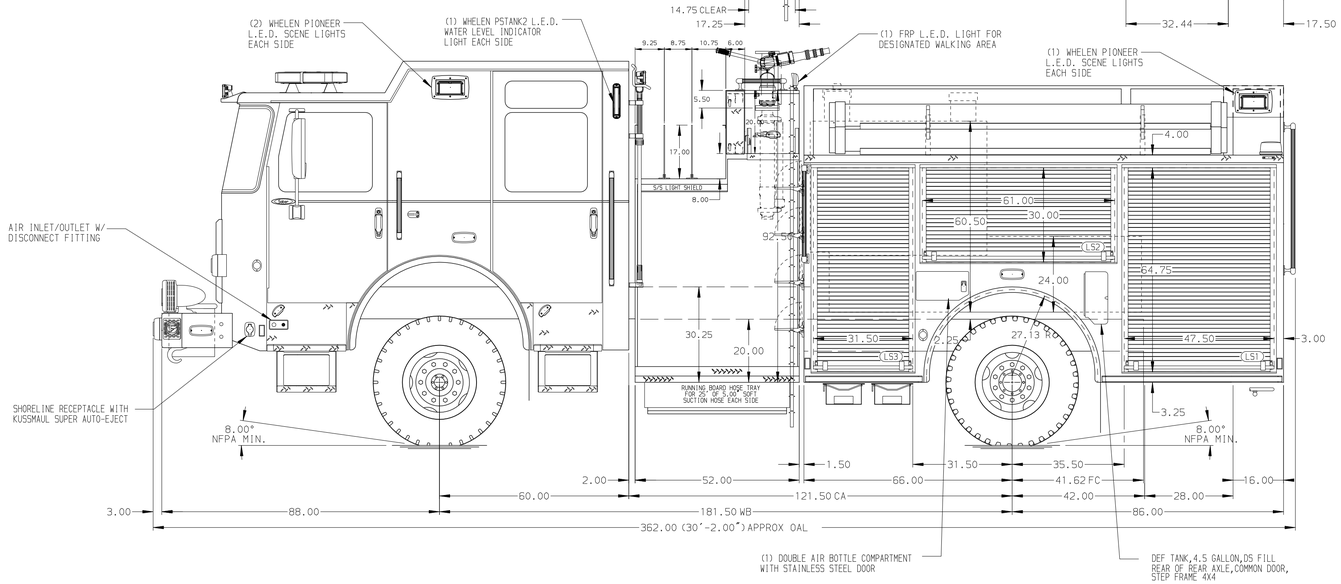

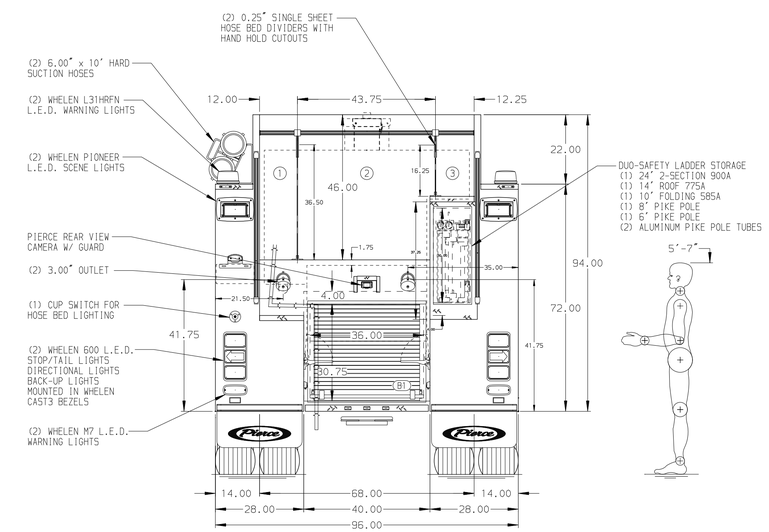

ALUMINUM BODY

MAXIMUM O.A.H 127.00"

MAXIMUM O.A.L 362.00"

NOTE

DIMENSIONS SHOWN ARE APPROXIMATE AND ARE SUBJECT TO MINOR DEVIATIONS AS MAY OCCUR OR BE NECESSARY IN CONSTRUCTION.
MINOR DETAILS NOT SHOWN.

REV	DATE	BY	CH
V	24MAY21	JAF	NAS
B	09APR21	RHU	NAS
A	25FEB21	JUS	PHA

CHASSIS DATA — MAKE: PIERCE — MODEL: SABER FR STEP FRAME

Pierce MANUFACTURING INC.

TITLE: 1500-D-775, 750G WATER, 25G FOAM, 152" PUMPER BODY (3) CROSSLAYS, DELUGE, LADDERS BTWN TANK & SIDE SHT

FOR: US ARMY PIERCE DIRECT

DWG NO.: 36028AD

JOB NO.	SCALE	DRAWN BY	CHECKED BY	SHEET SIZE	SHEET NO.
36028	1:24	JUS	PHA	D	1 OF 1

DATE: 10FEB21 (DRAWN BY) — 10FEB21 (CHECKED BY)

View File Created 24-MAY-2021 11:59:37