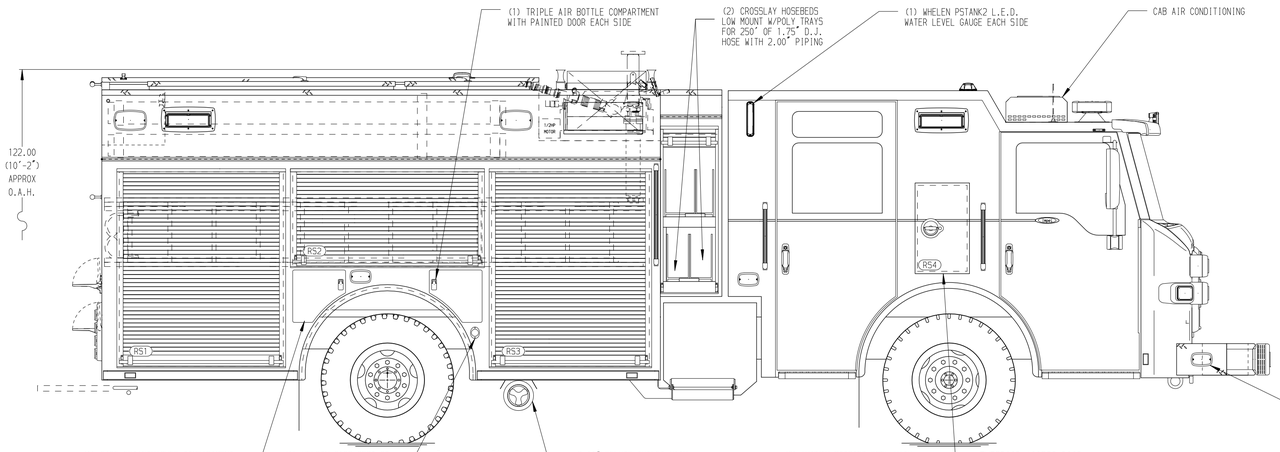

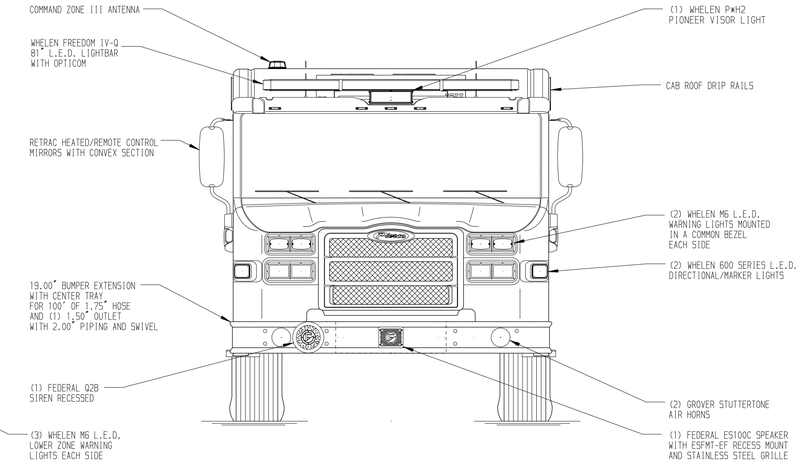

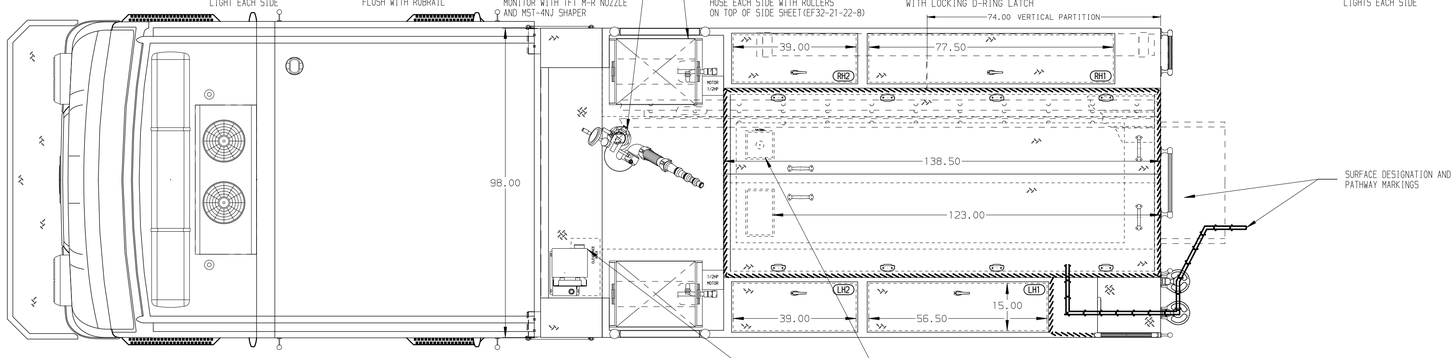

HOSEBED CAPACITIES

1 - 800' OF 5.00" D.J. POLY HOSE

2 - 800' OF 3.00" D.J. POLY HOSE

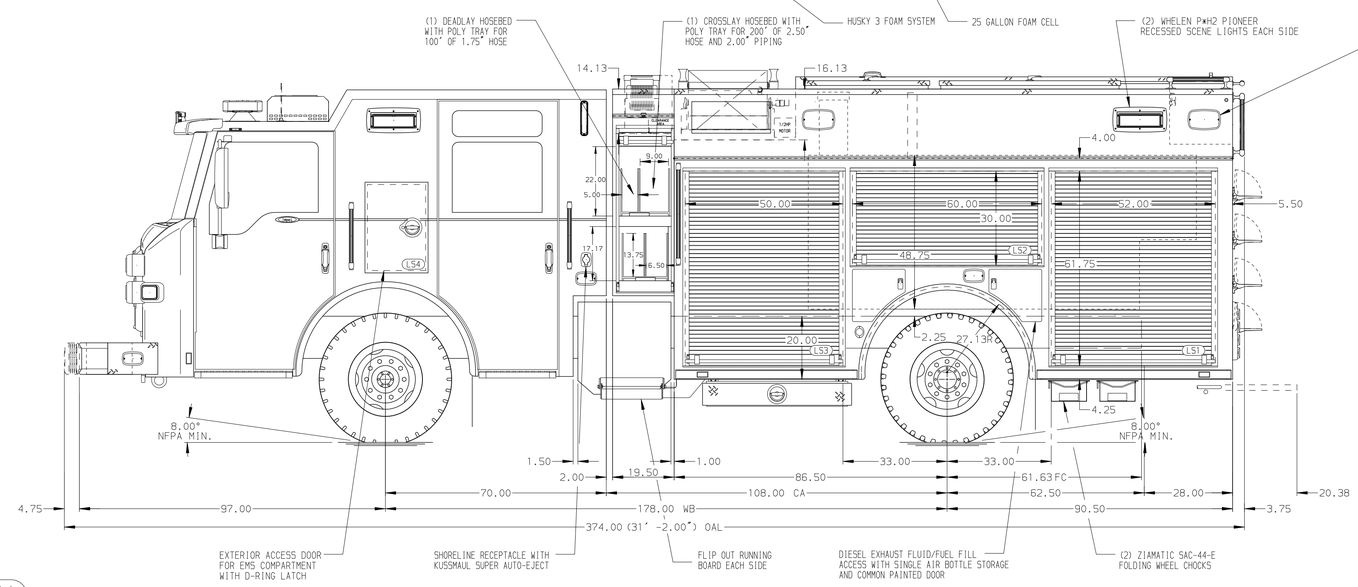

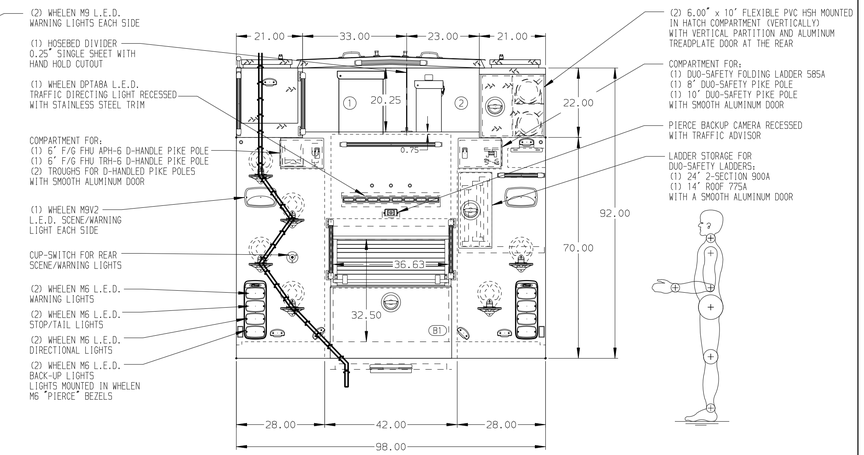

ALUMINUM BODY

NOTE

DIMENSIONS SHOWN ARE APPROXIMATE AND ARE SUBJECT TO MINOR DEVIATIONS AS MAY OCCUR OR BE NECESSARY IN CONSTRUCTION.
MINOR DETAILS NOT SHOWN.

1. AIR INLET/OUTLET WITH DISCONNECT FITTING LOCATED ON DRIVER'S STEP WELL
2. BATTERY CHARGER LOCATED BEHIND DRIVER SEAT
3. BATTERY CHARGE INDICATOR LOCATED NEAR DRIVER'S SEAT RISER WITH BRACKET
4. PULL STRAPS FOR CROSSLAY COMPARTMENT ROLL-UP DOORS
5. TWO ADJUSTABLE FULL WIDTH/DEPTH SHELF IN COMPARTMENT RS3, LS3, ONE IN RS1 AND RS2
6. ONE FLOOR MOUNTED FULL WIDTH/DEPTH SLIDE-OUT TRAY WITH 2.00" SIDES IN COMPARTMENT LS1 AND RS1
7. ONE ADJUSTABLE SLIDE OUT TREAY WITH 2.00" SIDES IN COMPARTMENT RS3
8. ONE SWING-OUT TOOLBOARD LOCATED IN COMPARTMENT LS2
9. TRANSVERSE PARTITION IN BETWEEN COMPARTMENTS LS1/RS1 AND B1
10. ONE VERTICAL PARTITION IN COMPARTMENT RH1
11. LITTLE GIANT LADDER MODEL 13 15413-001 LOCATED IN COMPARTMENT RS3
12. CIQUIT BREAKER PANEL IN COMPARTMENT LS1
13. TOOL BOARD MOUNTED ON THE BACK WALL OF COMPARTMENT LS2
14. ALL FOLDING STEPS TO BE TRIDENT WITH INTEGRATED L.E.D. LIGHT UNLESS SPECIFIED
15. 120V DUPLEX RECEPTACLE LOCATED IN COMPARTMENT RS3

REV	DATE	BY	CH
7	08JUL21	JJB	WKL
6	09JUN21	JJB	WKL
5	08JUN21	JJB	CSH

CHASSIS DATA
MAKE: PIERCE
MODEL: IMPEL

Pierce MANUFACTURING INC.

TITLE: 1500-D-775P, 750G WATER W/ 25G FOAM, 177" FH/FD BODY LDRS BETWEEN TANK & SS, DELUGE, BOOSTER REELS, HUSKY 3

FOR: LATHROP MANTECA FIRE DISTRICT, LATHROP, CALIFORNIA

DWG NO.: 36021AD

JOB NO.	SCALE	DRAWN BY	CHECKED BY	SHEET SIZE	SHEET NO.
36021	1:24	JJB	PHA	D	1 OF 1

DATE: 03MAR21 / 3MAR21

View File Created 08-JUL-2021 12:59:32