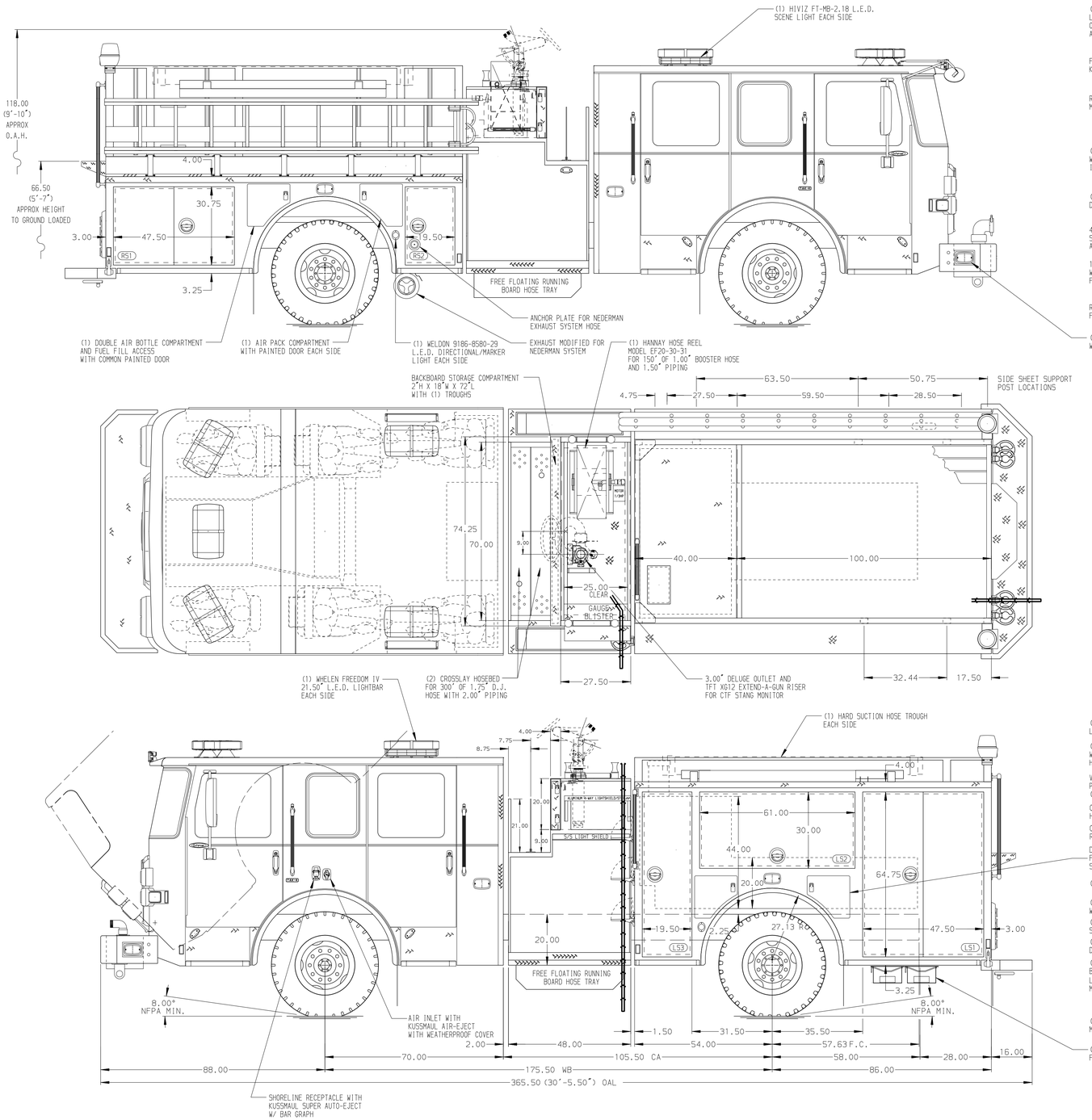

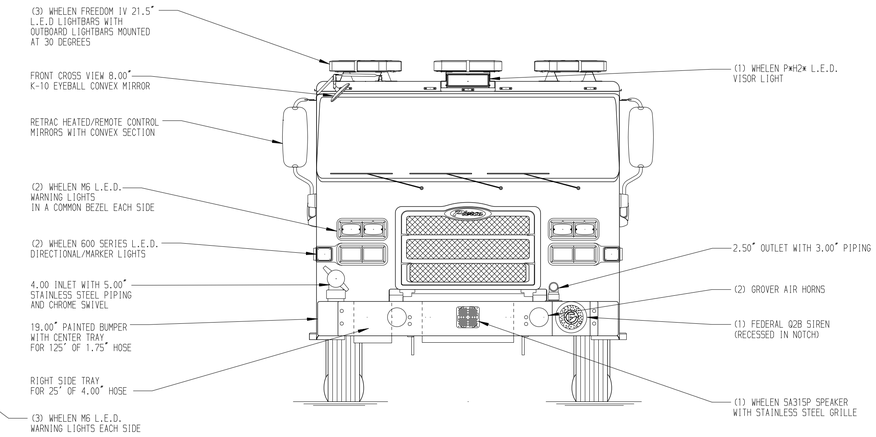

ISOLATION TAPE*

HOSEBED CAPACITIES
1 - 400' OF 1.75" HOSE
2 - 250' OF 2.50" HOSE
3 - 500' OF 3.00" HOSE
4 - 1000' OF 4.00" HOSE

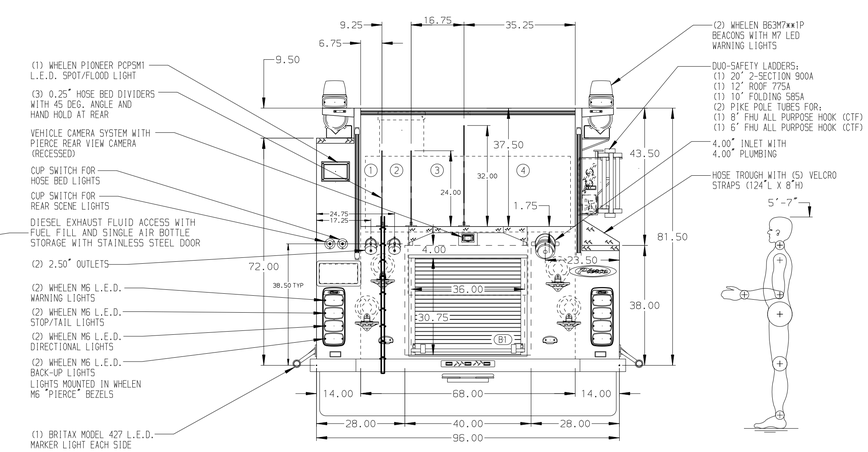

ALUMINUM BODY | MAXIMUM O.A.L. 384" | MAXIMUM O.A.H. 118" | SIDE ROLL & FRONTAL IMPACT PROTECTION

NOTE
DIMENSIONS SHOWN ARE APPROXIMATE AND ARE SUBJECT TO MINOR DEVIATIONS AS MAY OCCUR OR BE NECESSARY IN CONSTRUCTION.
MINOR DETAILS NOT SHOWN.

1. VOGEL LUBE SYSTEM PUMP LOCATED PER SHOP ORDER
2. BATTERY CHARGER LOCATED BEHIND DRIVER SEAT

REV	DATE	BY	CH
7	28MAY21	JWO	JBL
6	14APR21	JWO	JBL

CHASSIS DATA	
MAKE	PIERCE
MODEL	ENFORCER
TITLE	1500-D-500P WATER, 140" SHORT BODY, FH F&R DS, LOW PS (2)XLAYS, (1)BACKBOARD, (2)HSH TROUGHS, DELUGE, NYHB
FOR	BALTIMORE CITY FIRE DEPARTMENT BALTIMORE, MARYLAND
DWG NO.	35987AD-SH1

Pierce MANUFACTURING INC.

JOB NO.	35987 01-05
SCALE	1:24
DATE	
DRAWN BY	JWO 10FEB20
CHECKED BY	JBL 19FEB21
SHEET SIZE	D
SHEET NO.	1 OF 1

View File Created 01-JUN-2021 12:08:03