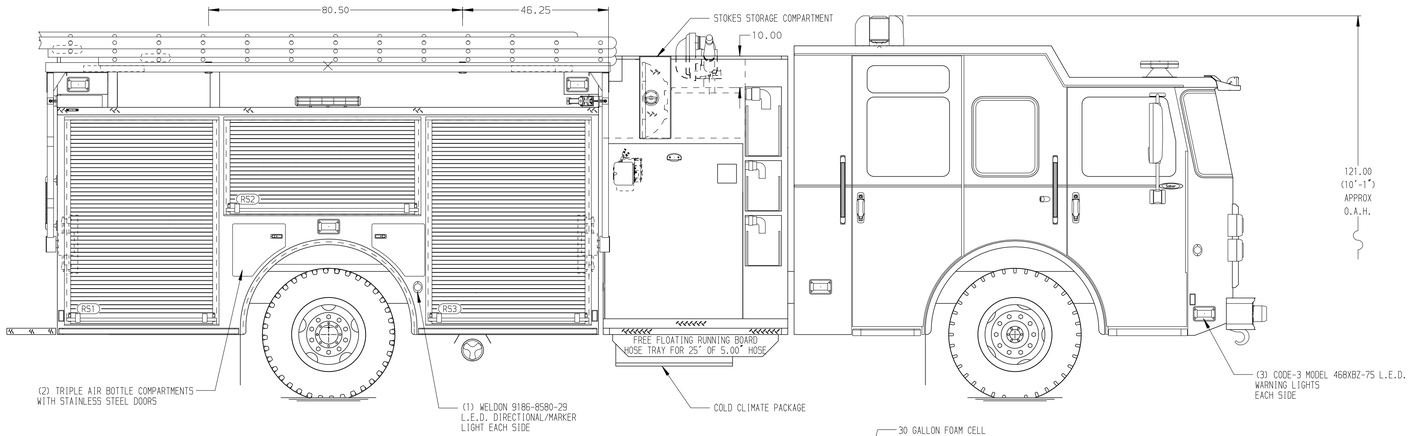

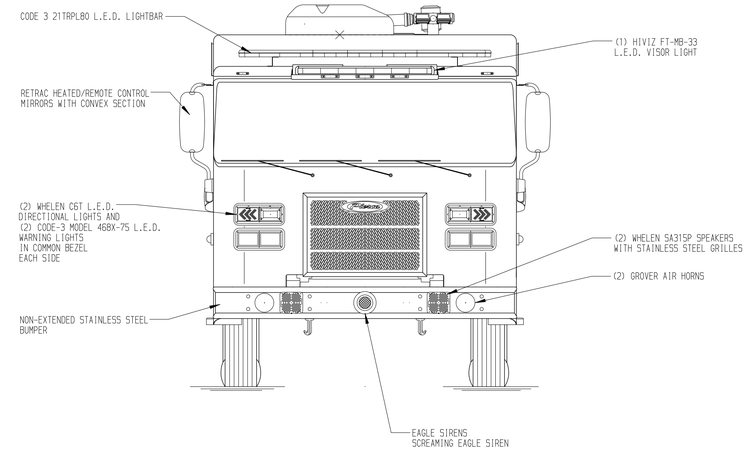

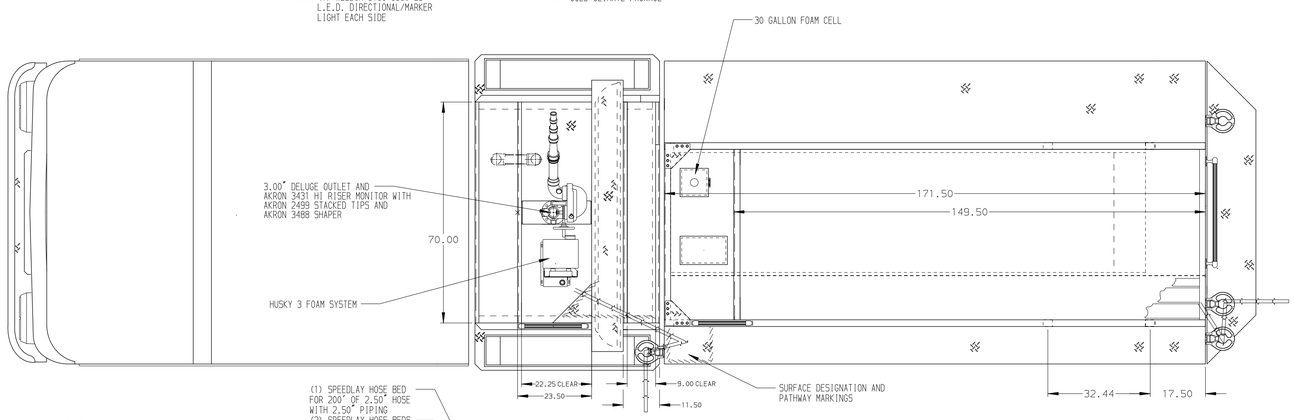

HOSEBED CAPACITIES

1. 600' OF 5.00" HOSE
2. 1200' OF 3.00" HOSE
3. 600' OF 1.75" HOSE

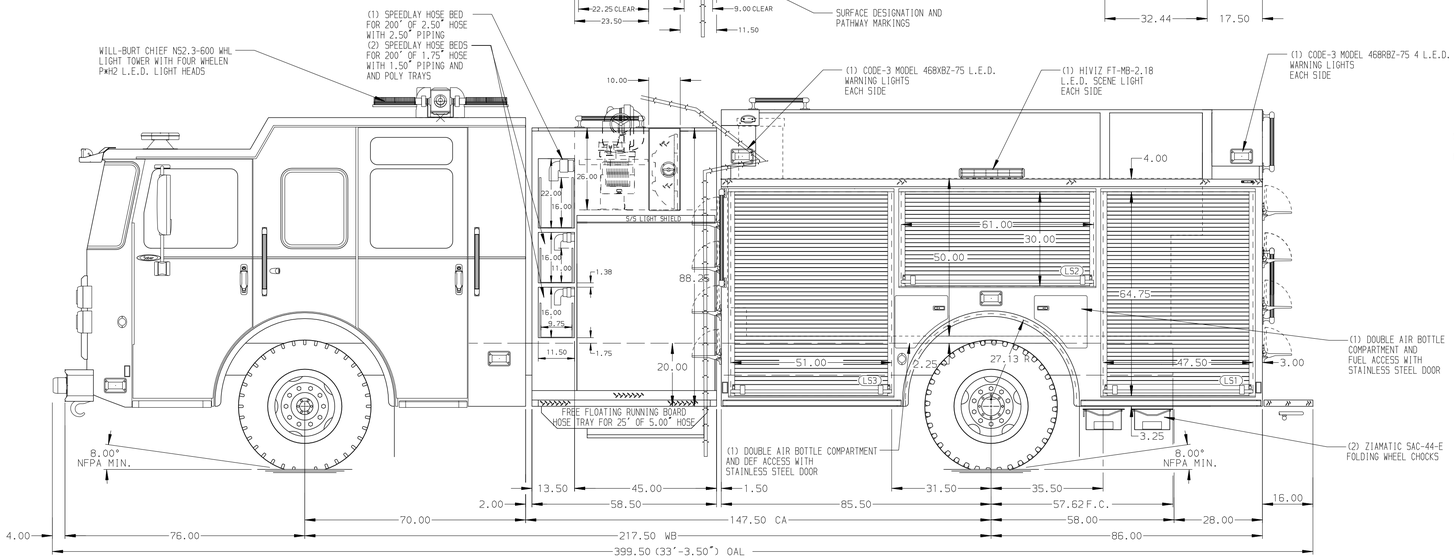

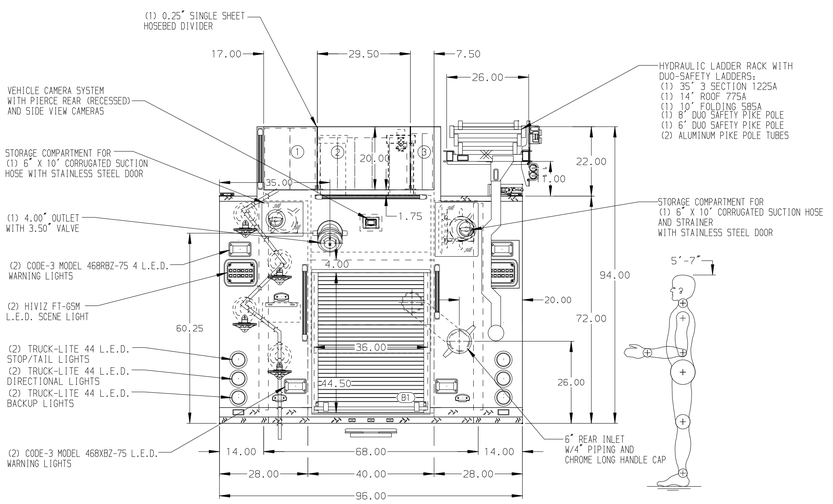

ALUMINUM BODY

NOTE

DIMENSIONS SHOWN ARE APPROXIMATE AND ARE SUBJECT TO MINOR DEVIATIONS AS MAY OCCUR OR BE NECESSARY IN CONSTRUCTION.
MINOR DETAILS NOT SHOWN.

REV	DATE	BY	CH
7	19APR21	RHU	AJA
6	15APR21	RHU	DDR
5	03MAR21	RHU	AJA

CHASSIS DATA
MAKE: PIERCE
MODEL: SABER FR

Pierce MANUFACTURING INC.

TITLE: 1500-D-1000P, 970 GAL OF WATER W/ 30 GAL FOAM CELL 171" FH FD BODY, HYDRAULIC LADDER RACK, (3) SPDLAYS

FOR: FENNIMORE FIRE DEPARTMENT, FENNIMORE, WISCONSIN

DWG NO.: 35950AD

JOB NO.	35950
SCALE	1:24
DATE	
DRAWN BY	SAM 11DEC20
CHECKED BY	WKL 11DEC20
SHEET SIZE	D
SHEET NO.	1 OF 1

View File Created 19-APR-2021 08:26:03