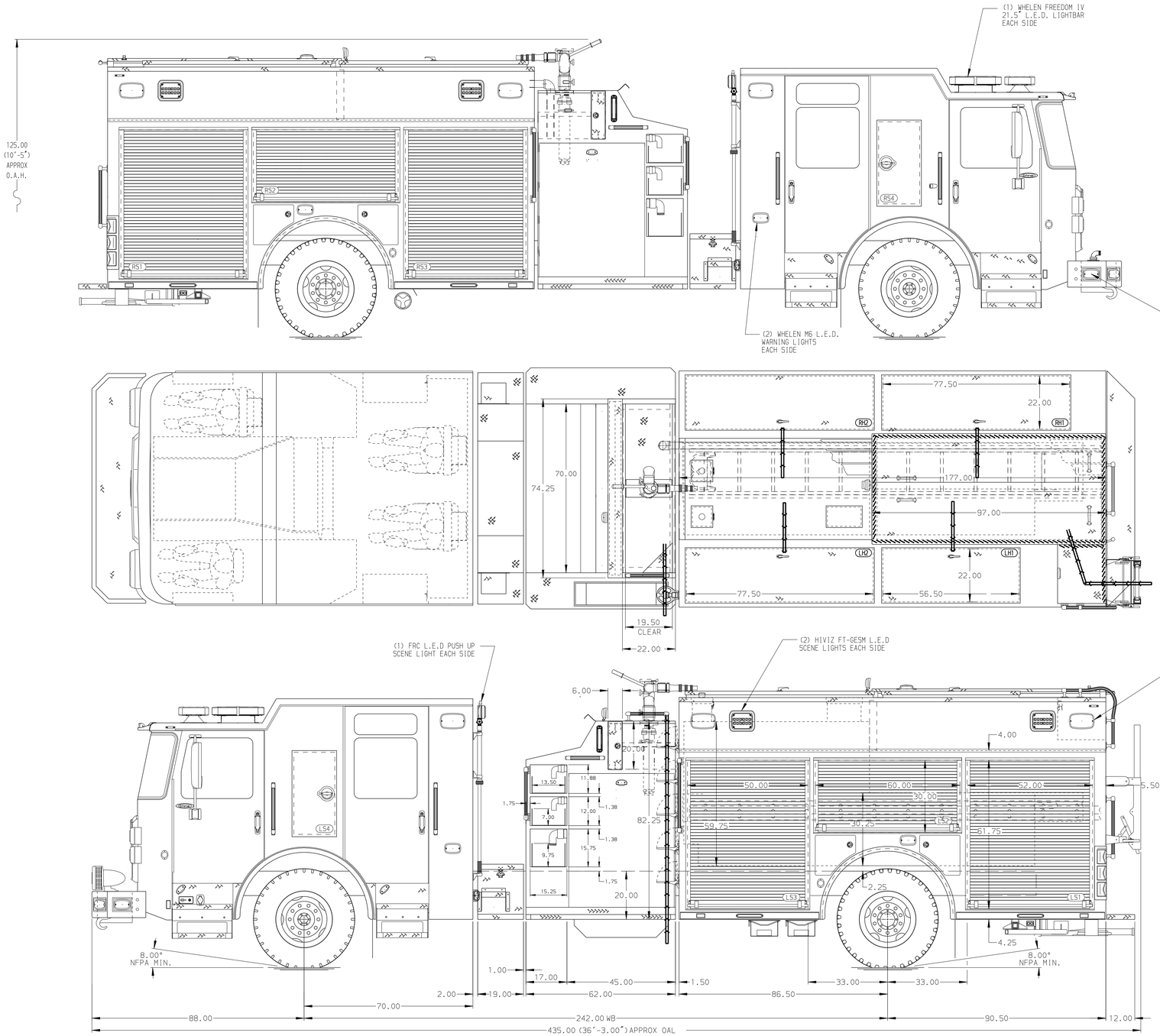

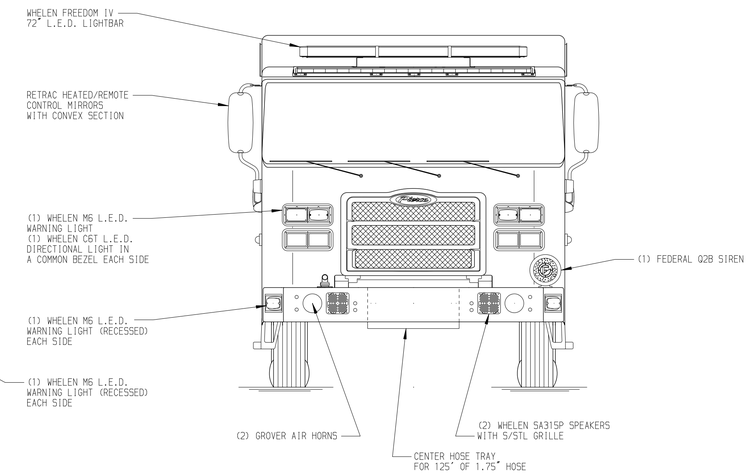

BODY	WATER TANK
Pumper, HDRP, Aluminum	750 Gallon Poly Water Tank
COMPT,LEFT SIDE	**Foam System**
177" RollUp Full Height & Depth Front & Rear	Foam System Not Required
COMPT,RIGHT SIDE	**Foam Cell**
177" RollUp Full Height & Depth Front & Rear	10 & 20 Gal Foam Cell Required
COMPT,REAR	
29.50" FF RollUp Rear Compt w/Tailboard	

HOSEBED CAPACITY

BED 1
600' OF 2.50" BIG 10 KEY HOSE

BED 2
1000' OF 5.00" BIG 10 KEY HOSE

BED 3
200' OF 2.50" BIG 10 KEY HOSE

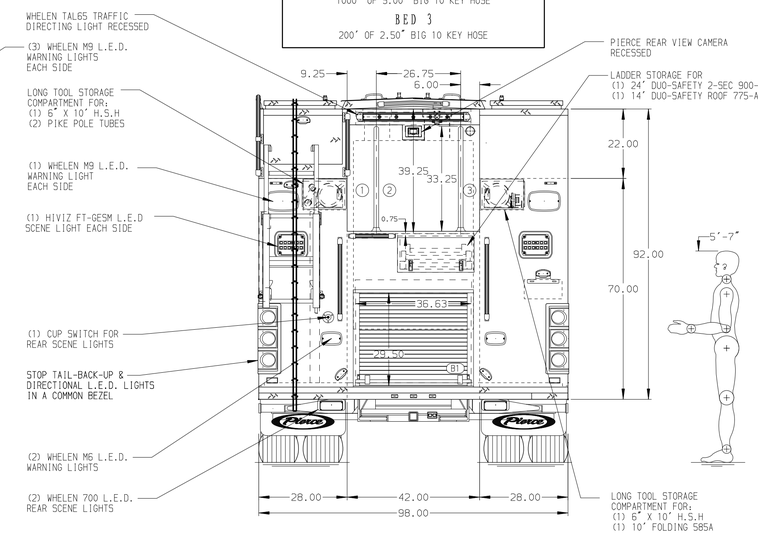

CHASSIS	CAB	AXLE,FRONT,CUSTOM	TRANSMISSION	PUMPHOUSE	CROSSLAYS,1.50"	SPEEDLAYS	SAFETY
Enforcer Chassis	7010 Enforcer Cab	18,000 Lb Meritor Axle	ALlison 5th Gen, 3000 EVS P	45" Control Zone Top Mount	1.50" Crosslays Not Required	(2)1.50"(1)2.50 W/Tray Std. Cap.	
ENGINE	**BUMPER**	**AXLE,REAR**		**PUMP**	**CROSSLAYS,2.50"**	**GENERATOR**	
450 HP Cummins L9 Engine	19" Extended Painted Steel	27,000 Lb Meritor Axle		1500 GPM Waterous CSU	2.50" Crosslay Not Required	Generator Not Required	

NOTE

DIMENSIONS SHOWN ARE APPROXIMATE AND ARE SUBJECT TO MINOR DEVIATIONS AS MAY OCCUR OR BE NECESSARY IN CONSTRUCTION.
MINOR DETAILS NOT SHOWN.

1. ONE 1.50 OUTLET WITH 2.00 PIPING AND SWIVEL LOCATED ON TOP BUMPER RIGHT SIDE
2. SHORELINE RECEPTACLE WITH KUSSMAUL SUPER AUTO-EJECT LOCATED ON DRIVER SIDE STEP WELL
3. AIR INLET/OUTLET WITH DISCONNECT COUPLING IN THE DRIVER SIDE STEPWELL
4. BATTERY CHARGER LOCATED IN COMPARTMENT PER SHOP ORDER
5. BATTERY CHARGE INDICATOR LOCATED ON THE DRIVER SIDE SEAT RISER

REV	DATE	BY	CH
7	30APR21	MMF	JJR
6	10MAR21	MMF	JJR

CHASSIS DATA — MAKE: PIERCE — MODEL: ENFORCER

Pierce MANUFACTURING INC.

TITLE: Pierce Pumper Approval Drawing –
FOR: Polk County Fire Rescue –
DWG NO.: 35949AD-SH1

JOB NO.	SCALE	DRAWN BY	CHECKED BY	SHEET SIZE	SHEET NO.
35949 01-02	1:24	MMF	COL	D	1 OF 2

DATE: 01FEB21 — 1FEB21

View File Created 02-JUN-2021 12:13:44