RIGHT SIDE COMPARTMENTS CONTAIN THE FOLLOWING:

COMPARTMENT RS1 CONTAINS:
- (1) ELECTRIC CORD REEL WITH 200' OF 10/3 BLACK CORD
- (2) HYDRAULIC CORD REELS W/100' OF HOSE
- (1) LAZY SUSAN TURNTABLE FOR HYD TOOLS
- (1) RV-100 HYDRAULIC SYSTEM SHUT-OFF
- (1) STD DEPTH FLOOR MOUNTED TRAY

COMPARTMENT RS2 CONTAINS:
- (2) 15/20A,120V 4-PLACE RECEPTACLES
- (1) STD DEPTH ADJ SLIDE OUT/TILT TRAY

COMPARTMENT RS3 CONTAINS:
- (3) STD DEPTH ADJ SLIDE OUT TOOLBOARDS

COMPARTMENT RS4 CONTAINS:
- (1) CAB LIFT CONTROLLER
- (1) SPEEDLAY W/200' OF 2.50" HOSE
- (1) SPEEDLAY W/200' OF 1.75" HOSE
- (1) STD DEPTH FLOOR MOUNTED TRAY
- (1) RACK FOR STOKES BASKET & BACKBOARD

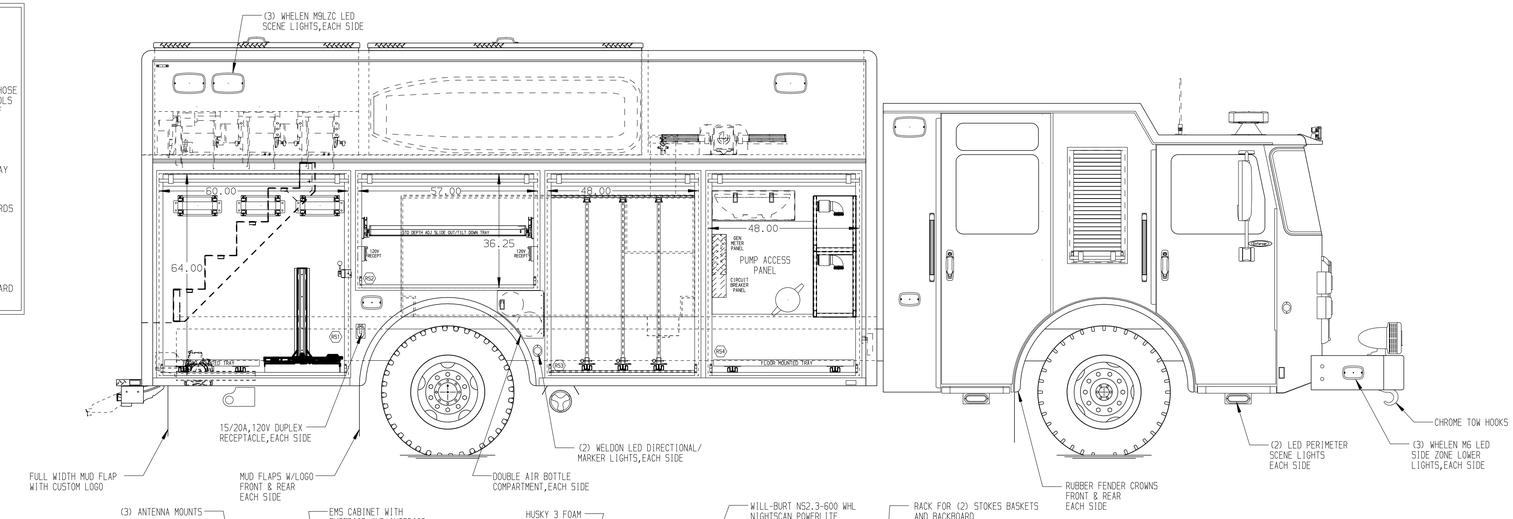

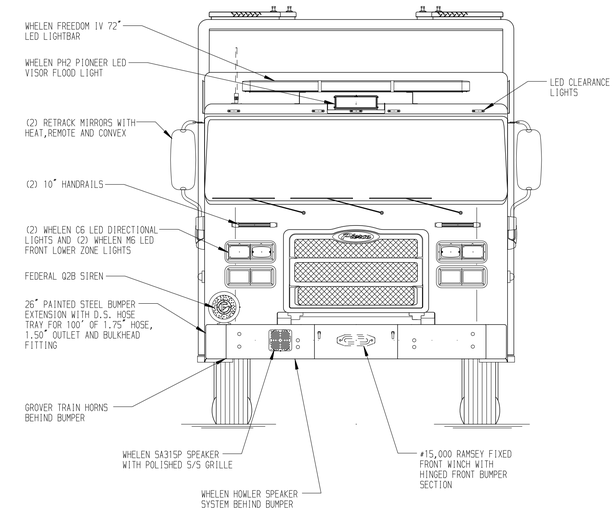

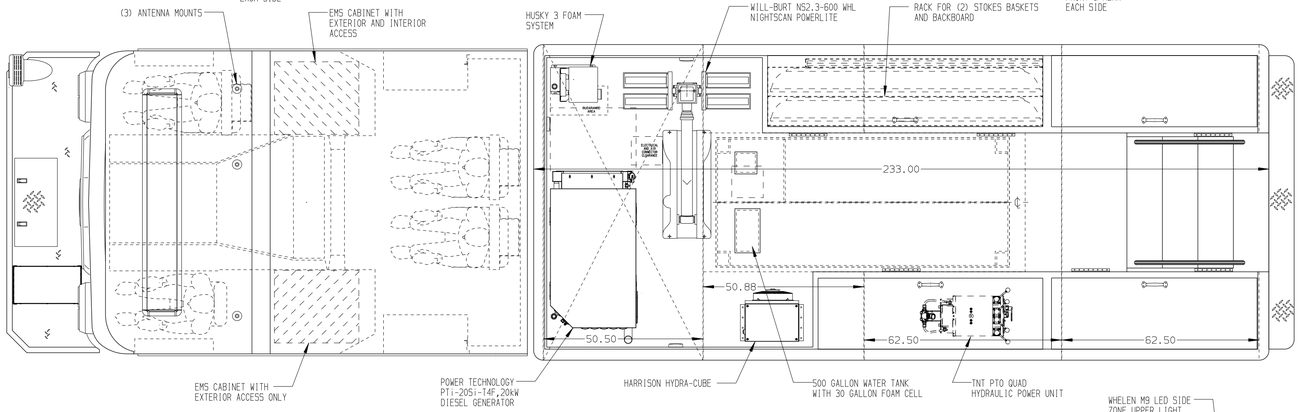

REAR COMPARTMENT CONTAINS THE FOLLOWING:

COMPARTMENT B1 CONTAINS:
- (1) RACK FOR LITTLE GIANT LADDER
- (3) ADJUSTABLE SHELVES

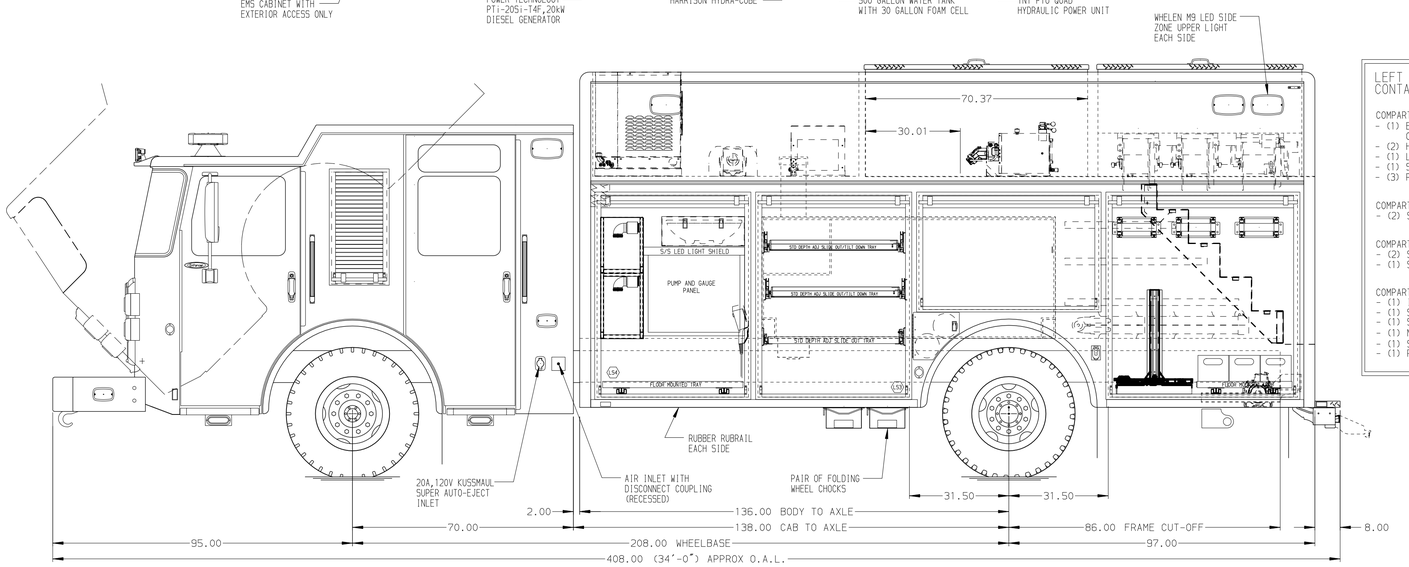

LEFT SIDE COMPARTMENTS CONTAIN THE FOLLOWING:

COMPARTMENT LS1 CONTAINS:
- (1) ELECTRIC CORD REEL WITH 200' OF 10/3 BLACK CORD
- (2) HYDRAULIC CORD REELS W/100' OF HOSE
- (1) LAZY SUSAN TURNTABLE FOR HYD TOOLS
- (1) STD DEPTH FLOOR MOUNTED TRAY
- (3) POLY TOOL BOXES

COMPARTMENT LS2 CONTAINS:
- (2) STD DEPTH ADJ SLIDE OUT/TILT TRAYS

COMPARTMENT LS3 CONTAINS:
- (2) STD DEPTH ADJ SLIDE OUT/TILT TRAYS
- (1) STD DEPTH ADJ SLIDE OUT TRAY

COMPARTMENT LS4 CONTAINS:
- (1) IOTA 75 AMP CHARGER
- (1) SPEEDLAY W/200' OF 2.50" HOSE
- (1) SPEEDLAY W/200' OF 1.75" HOSE
- (1) NIGHTSCAN CONTROLLER
- (1) STD DEPTH FLOOR MOUNTED TRAY
- (1) RACK FOR STOKES BASKET & BACKBOARD

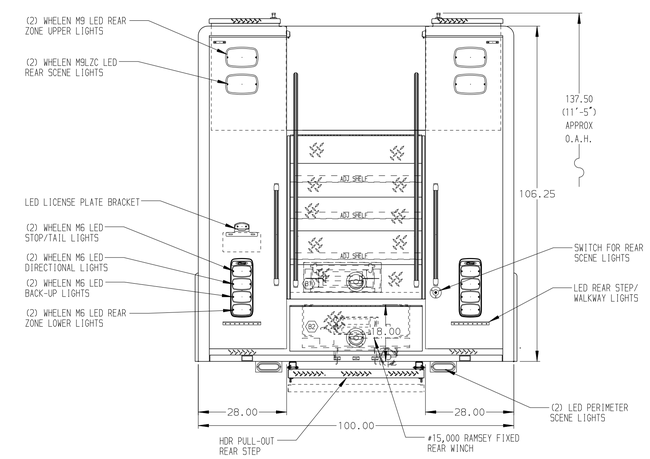

NOTE

DIMENSIONS SHOWN ARE APPROXIMATE AND ARE SUBJECT TO MINOR DEVIATIONS AS MAY OCCUR OR BE NECESSARY IN CONSTRUCTION.
MINOR DETAILS NOT SHOWN.

NOTES:
1. HALE MG-100 1000 GPM WATER PUMP LOCATED BETWEEN THE FRAME RAILS
2. POLISHED S/S SCUFFPLATES ON CAB AND CREW CAB DOOR JAMBS
3. FLOOR IN CAB AND CREW CAB TO BE PADDED RUBBER
4. BATTERY CHARGE INDICATOR LOCATED ON DRIVER'S SEAT RISER
5. LED LIGHTS IN ALL BODY AND HATCH COMPARTMENTS
6. (2) 15/20A,120V 4-PLACE RECEPTACLES IN PASSENGER'S SIDE EMS CABINET IN CAB

SIDE ROLL AND FRONTAL IMPACT PROTECTION

CLEAR DOOR WIDTH KEY

AMDOR ROLL UP DOORS:	-2 1/4"
GORTITE ROLL UP DOORS:	-2 1/2"
PIERCE DOUBLE LAP DOORS:	-4 1/4"
PIERCE LIFT-UP LAP DOORS:	-1 1/2"

(EX: 60"F-F - 2 1/4"= 57 3/4" CLEAR)
(F-F)= FRAME TO FRAME

REV	DATE	BY	CH
1	06AUG21	DHE	AZU
2	11JUN21	DHE	AZU
3	13APR21	DHE	AZU

CHASSIS DATA
MAKE: PIERCE
MODEL: EN7010

Pierce MANUFACTURING INC.

TITLE: HEAVY DUTY RESCUE NON-WALKIN
FOR: CLEVELAND TOWNSHIP BID #918 DAVE POLKOW
DWG NO.: 35923AD

JOB NO. 35923
SCALE 1:24
DATE 05APR21
DRAWN BY DHE
CHECKED BY AZU 8APR21
SHEET SIZE D
SHEET NO. 1 OF 1

View File Created 06-AUG-2021 08:05:48