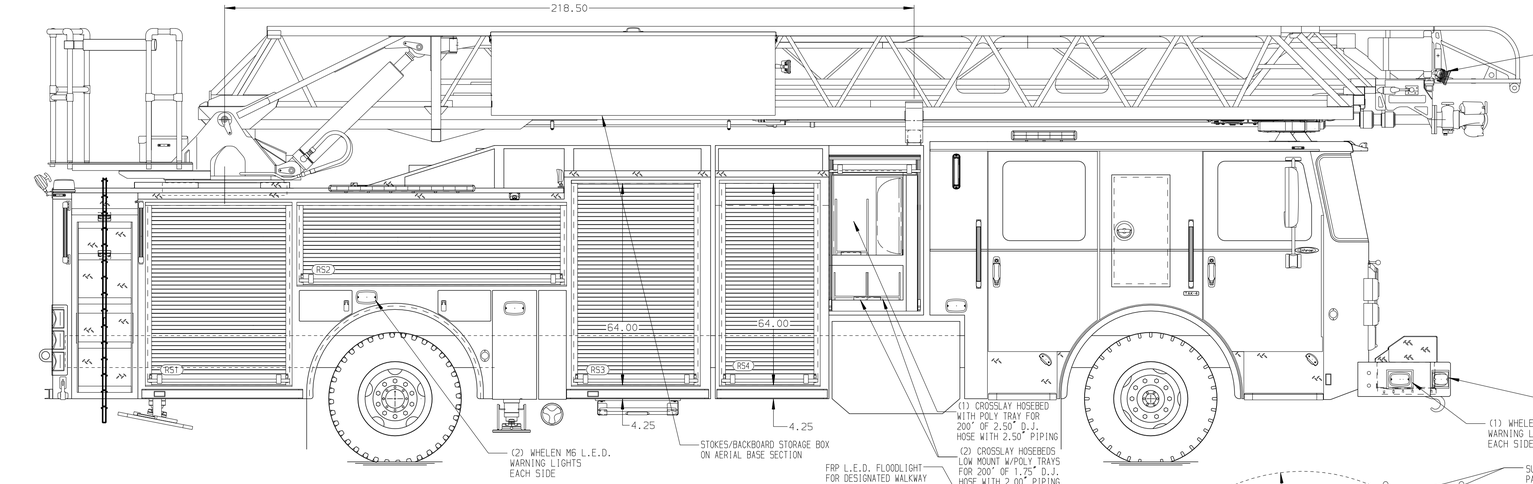

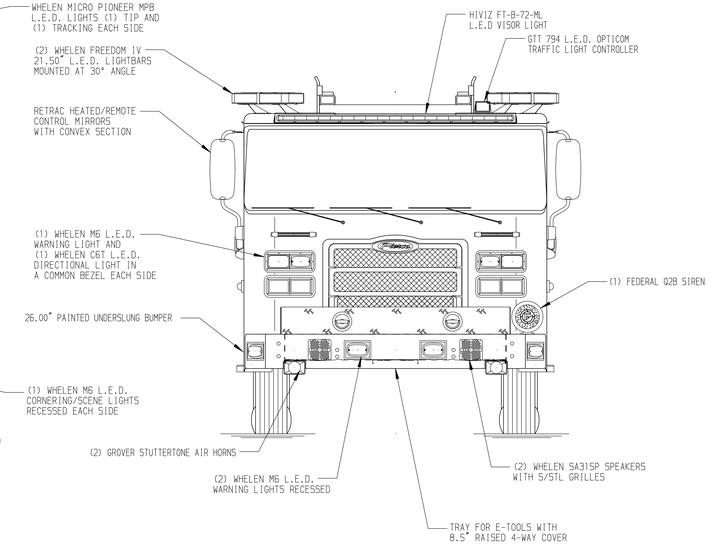

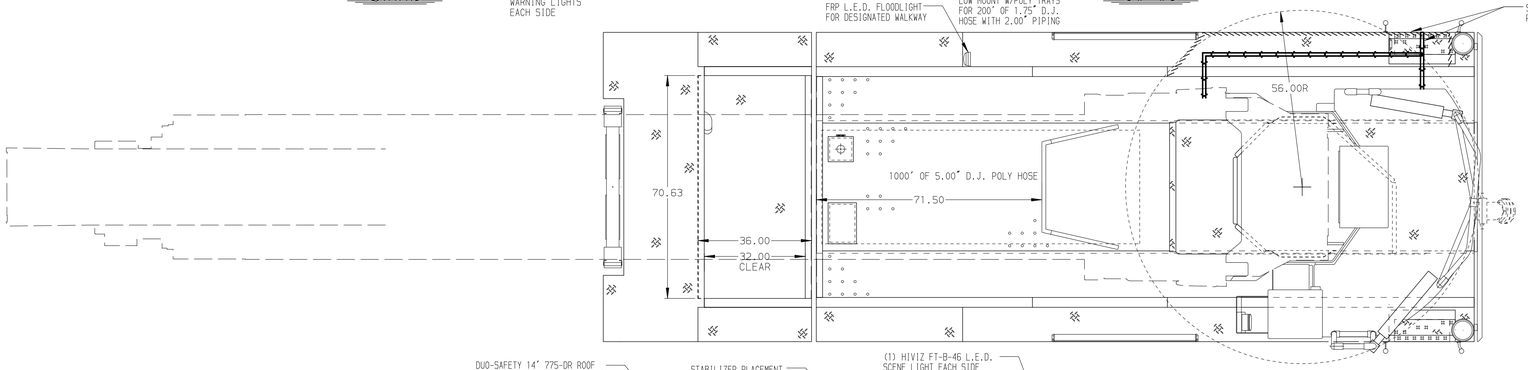

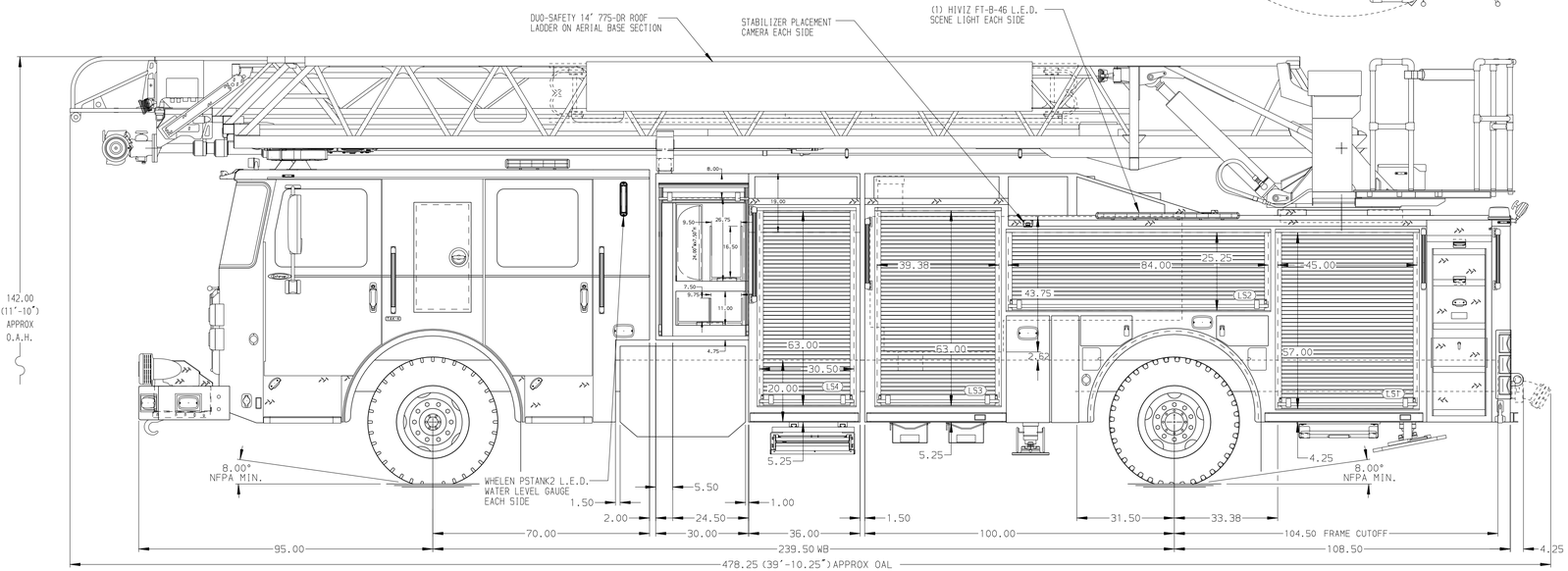

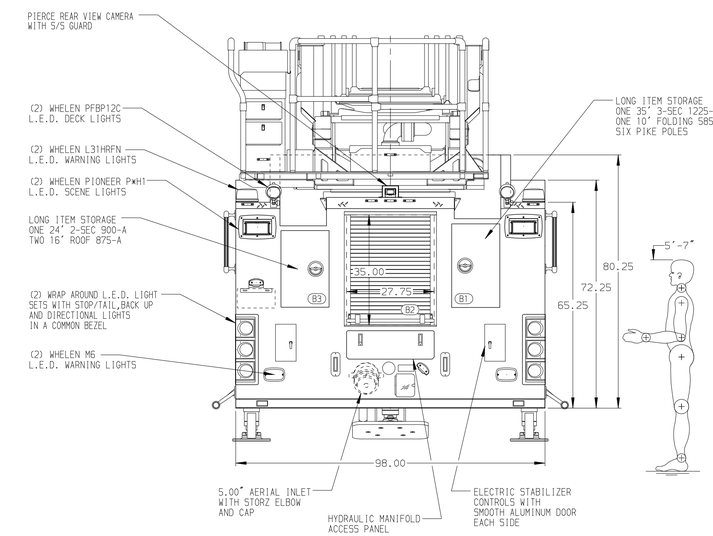

ALUMINUM BODY

MAX O.A.H. 142.00"

SIDE ROLL AND FRONTAL IMPACT PROTECTION

Pierce MANUFACTURING INC.

JOB NO.	35916
SCALE	1:24
DATE	
TITLE	107' ASCENDANT AERIAL LADDER AND BODY ASSEMBLY 500 GALLON TANK - 480 WATER/20 FOAM
FOR	WAREHOUSE POINT FD EAST WINDSOR, CT
DRAWN BY	LWE
CHECKED BY	ZCH
DATE	23FEB21
DATE	24FEB21
SHEET SIZE	D
SHEET NO.	1 OF 1
DWG NO.	35916AD

NOTE

DIMENSIONS SHOWN ARE APPROXIMATE AND ARE SUBJECT TO MINOR DEVIATIONS AS MAY OCCUR OR BE NECESSARY IN CONSTRUCTION.
MINOR DETAILS NOT SHOWN.

1. SUB FEED BREAKER BOX LOCATED PER SHOP ORDER
2. SHORELINE RECEPTACLE WITH KUSSMAUL SUPER AUTO-EJECT LOCATED ON DRIVER SIDE FRONT CAB CORNER
3. ELEVEN PULL STRAPS FOR ROLL DOORS LOCATED PER SHOP ORDER
4. BATTERY CHARGER LOCATED IN COMPARTMENT PER SHOP ORDER
5. BATTERY CHARGE INDICATOR LOCATED ON THE DRIVER SIDE SEAT RISER
6. FIVE ADJUSTABLE SHELVES IN COMPARTMENTS PER SHOP ORDER
7. FIVE FLOOR MOUNTED SLIDE-OUT TRAYS IN COMPARTMENTS PER SHOP ORDER
8. NON-RAISED AERIAL PEDESTAL
9. LIFTING EYE ROPE RESCUE ATTACHMENT AT AERIAL TIP
10. 1500 GPM HIGH FLOW WATERWAY
11. THREE POLY TOOL BOXES IN COMPARTMENT PER SHOP ORDER
12. SEVEN PEGBOARDS ON BACK WALL OF COMPARTMENTS PER SHOP ORDER
13. EXTERNAL FOAM SYSTEM
14. TWO 120V RECEPTACLES IN CAB PER SHOP ORDER
15. THREE 120V RECEPTACALES IN COMPARTMENTS PER SHOP ORDER
16. RUNG LIGHTING ON AERIAL LADDER PER SHOP ORDER
17. 2-WAY INTERCOM SYSTEM BETWEEN AERIAL TIP AND TURNTABLE
18. LIMITED RETRACTION NOT REQUIRED

REV	DATE	BY	CH
2	12MAY21	LWE	CSH
1	13APR21	LWE	CSH

CHASSIS DATA
MAKE: PIERCE
MODEL: ENFORCER

View File Created 12-MAY-2021 14:24:28