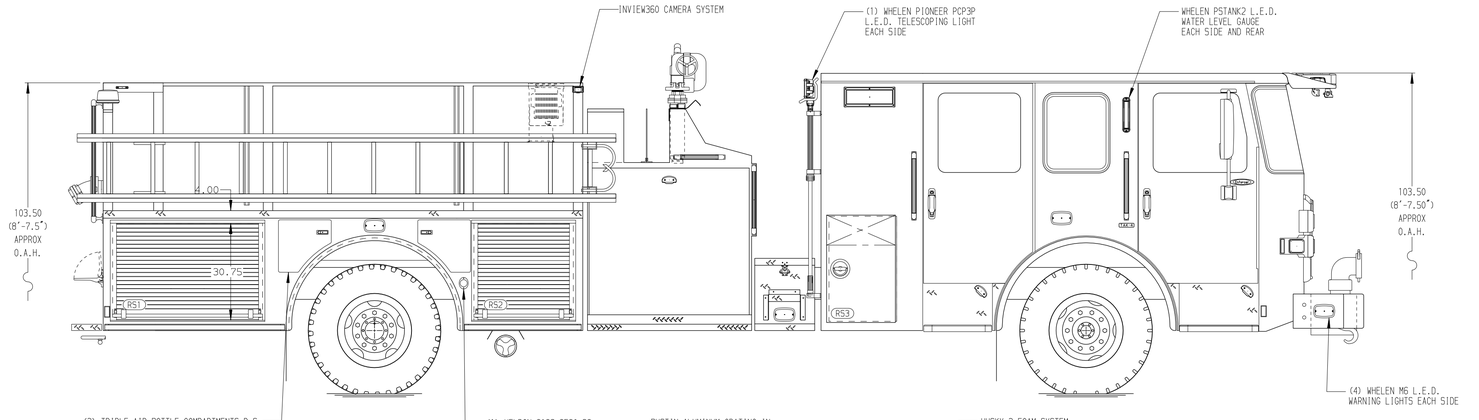

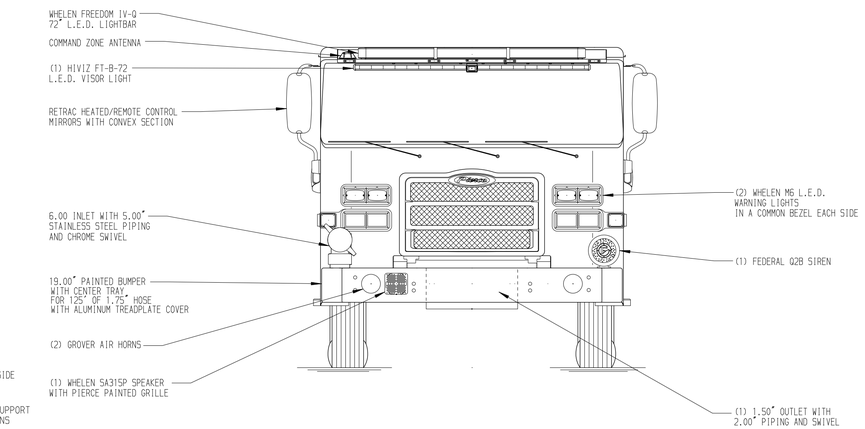

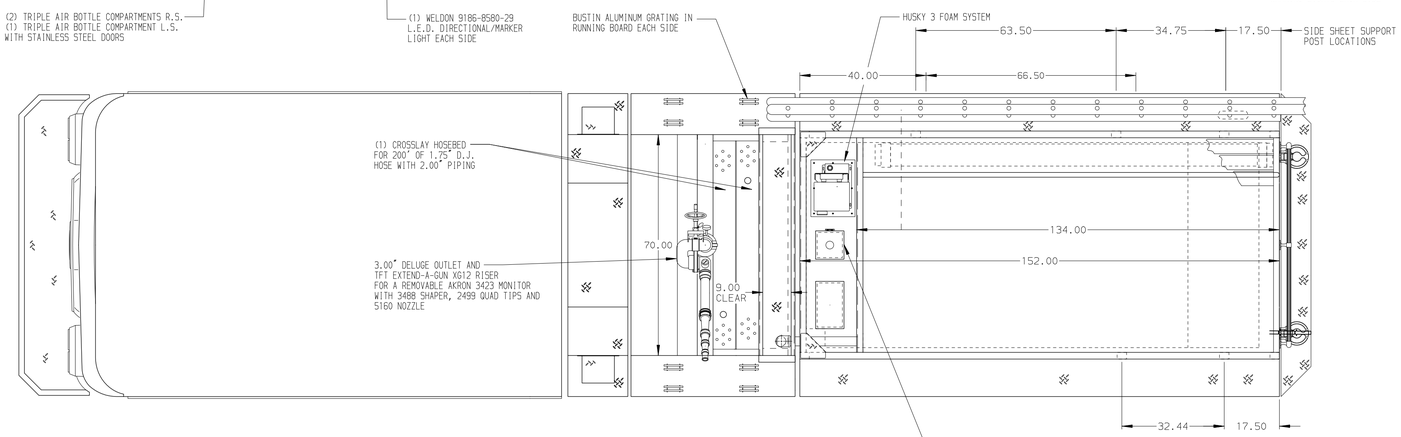

HOSEBED CAPACITIES

1. 300' OF 1.75" HOSE
2. 300' OF 2.50" HOSE
3. 1000' OF 5.00" HOSE

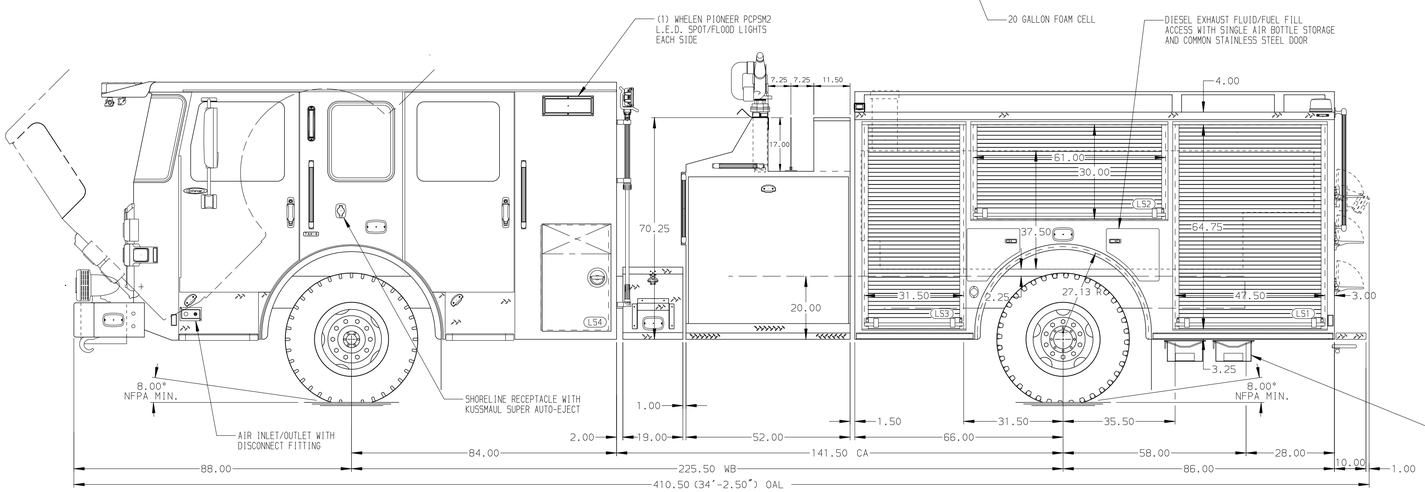

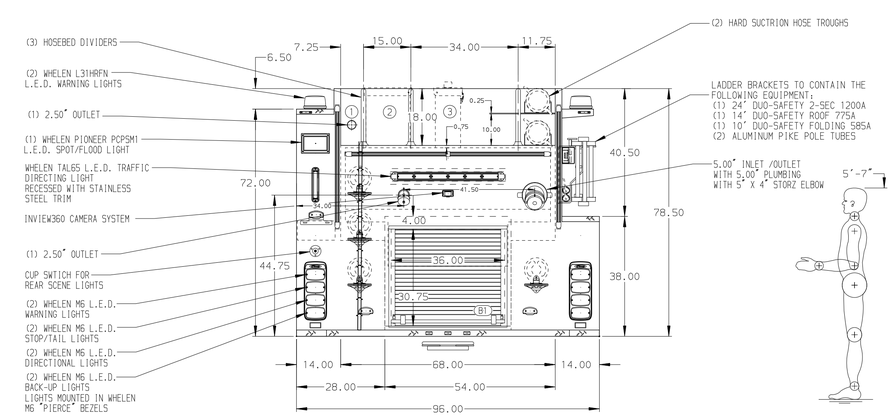

ALUMINUM BODY

MAXIMUM O.A.H. 103.50"

FRONTAL IMPACT PROTECTION

NOTE

DIMENSIONS SHOWN ARE APPROXIMATE AND ARE SUBJECT TO MINOR DEVIATIONS AS MAY OCCUR OR BE NECESSARY IN CONSTRUCTION.
MINOR DETAILS NOT SHOWN.

1. KUSSMAUL AIR COMPRESSOR LOCATED BEHIND DRIVER'S SEAT
1. BATTERY CHARGER LOCATED IN COMPARTMENT LS3
2. BATTERY CHARGER INDICATOR LOCATED ON DRIVER'S SEAT RISER
3. DUAL L.E.D. LIGHT STRIPS LOCATED ON THE FRONT OF THE HOSEBED
4. DRIP PAN GUARD FOR ROLL-UP DOOR LOCATED IN COMPARTMENTS LS1,LS2,LS3,RS1,RS2,B1
5. ONE FULL WIDTH/DEPTH ADJUSTABLE SHELF IN COMPARTMENTS LS1,LS3,RS1,B1
6. ONE FLOOR MOUNTED SLIDE-OUT TRAY IN COMPARTMENT LS1,LS3,RS1,B1
7. ONE SWING-OUT ALUMINUM TOOL BOARD IN COMPARTMENT LS2

REV	DATE	BY	CH
V	24MAY21	JWO	CSH
V	29APR21	JWO	CSH
V	11FEB21	CDU	PHA
V	10FEB21	CDU	PHA

CHASSIS DATA
MAKE: PIERCE
MODEL: ENFORCER

Pierce MANUFACTURING INC.

TITLE: 1500-D-980P W/20G FOAM,152",FULL HEIGHT LS,LOW RS (2) X-LAYS,DELUGE
FOR: SHELTER ISLAND FIRE DISTRICT, SHELTER ISLAND, NEW YORK
DWG NO.: 35890AD

JOB NO.	35890
SCALE	1:24
DATE	
DRAWN BY	JWO 28JAN21
CHECKED BY	CDU 04FEB21
SHEET SIZE	D
SHEET NO.	1 OF 1

View File Created 03-JUN-2021 06:04:01