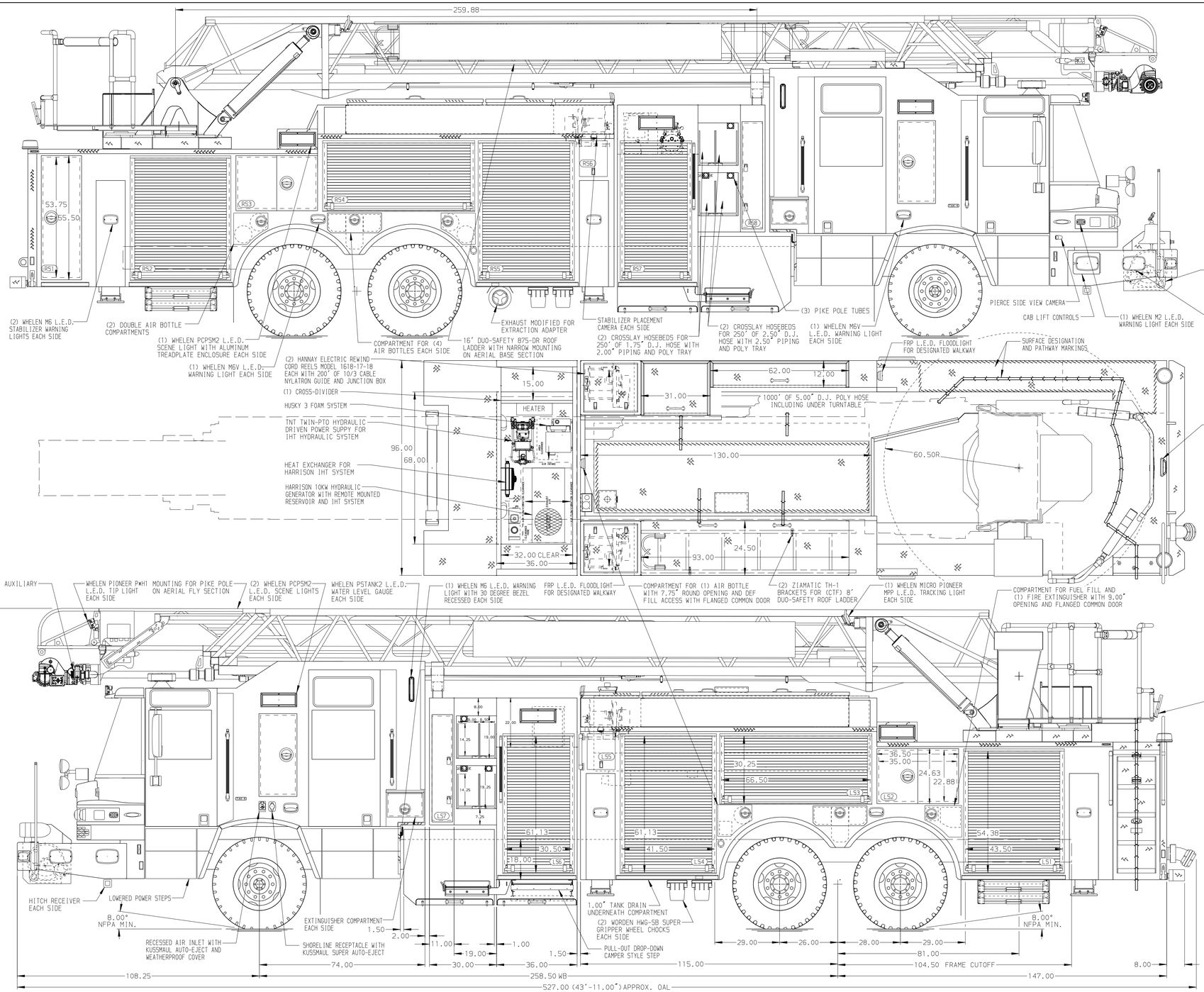

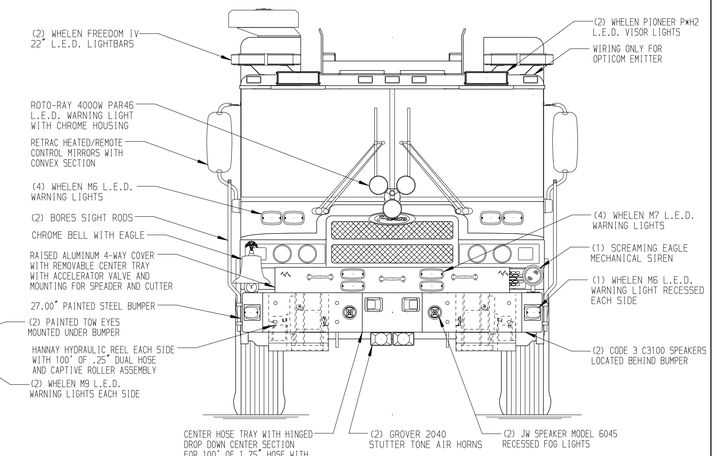

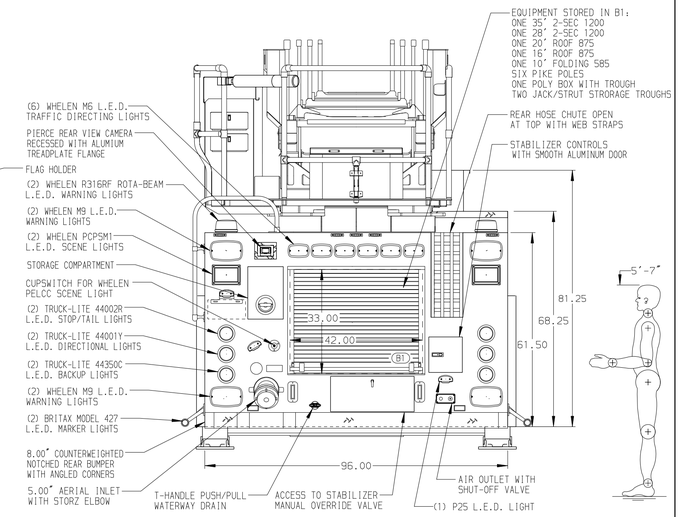

ALUMINUM BODY

NOTE

DIMENSIONS SHOWN ARE APPROXIMATE AND ARE SUBJECT TO MINOR DEVIATIONS AS MAY OCCUR OR BE NECESSARY IN CONSTRUCTION.
MINOR DETAILS NOT SHOWN.

1. OSHKOSH TAK-4 T3 REAR STEER
2. BATTERY CHARGER LOCATED IN COMPARTMENT PER SHOP ORDER
3. BATTERY CHARGE INDICATOR LOCATED ON DRIVER'S SEAT RISER
4. L.E.D. LIGHT STRIPS LOCATED IN THE HOSE BED PER SHOP ORDER
5. DIVIDER LOCATED IN PUC CARGO COMPARTMENT PER SHOP ORDER
6. ONE RETAINING LIP LOCATED IN COMPARTMENT PER SHOP ORDER
7. DRIP PAN GUARD FOR EACH ROLL-UP DOOR PER SHOP ORDER
8. NINE ADJUSTABLE FULL WIDTH/FULL DEPTH SHELVES IN COMPARTMENTS PER SHOP ORDER
9. TWO ADJUSTABLE TILTING SLIDE-OUT TRAYS IN COMPARTMENT PER SHOP ORDER
10. ONE SWING-OUT TOOL BOARD WITH PEGBOARD PATTERN IN COMPARTMENT PER SHOP ORDER
11. TWO 120V DUPLEX RECEPTACLES LOCATED IN COMPARTMENTS PER SHOP ORDER
12. TWO 120V DUPLEX RECEPTACLES LOCATED IN EMS COMPARTMENTS PER SHOP ORDER
13. TWO VERTICAL PARTITIONS (SPECIAL HEIGHT) IN COMPARTMENTS PER SHOP ORDER
14. ONE NYLON STRAP WITH VELCRO IN COMPARTMENT PER SHOP ORDER
15. ALUMINUM TREADPLATE ON THE FLOOR OF COMPARTMENT PER SHOP ORDER
16. MOUNTING RACK WITH STRAPS FOR (2) FIRE EXTINGUISHERS IN COMPARTMENT PER SHOP ORDER
17. CIRCUIT BREAKER PANEL IN COMPARTMENT PER SHOP ORDER
18. HOT WATER HEATER WITH THERMOSTAT IN CARGO COMPARTMENT AND RECESSED INTO R57 PER SHOP ORDER
19. WIRING AT AERIAL TIP FOR CAMERA
20. TWO MOUNTS FOR HIGH RISE PACKS IN COMPARTMENT PER SHOP ORDER
21. TRIDENT FOLDING STEPS ON AERIAL DEVICE
22. REMOTE LADDER CONTROLS AT AERIAL TIP
23. STABILIZERS MODIFIED FOR 18" GROUND PENETRATION
24. L.E.D. LIGHTING ON AERIAL LADDER SECTIONS
25. TECNIQ L.E.D. RUNG STYLE LIGHTING ON BOTTOM OF AERIAL EGRESS
26. 2-WAY INTERCOM SYSTEM BETWEEN AERIAL TIP OR PLATFORM AND TURNTABLE
27. LIFTING EYE ROPE RESCUE ATTACHMENT AT AERIAL TIP
28. 1500 GPM HIGH FLOW WATERWAY
29. 8.00" RAISED AERIAL PEDESTAL
30. 28.00" LIMITED RETRACTION ON AERIAL DEVICE

REV	DATE	BY	CH
E	24MAY21	SHU	NPE
D	06MAY21	SHU	AZA
C	18FEB21	SHU	NPE
B	12JAN21	SHU	CRI
A	28DEC20	SHU	ZCH

CHASSIS DATA
MAKE: PIERCE
MODEL: QUANTUM

Pierce MANUFACTURING INC.

TITLE: 107' ASCENDANT AERIAL LADDER AND BODY ASSEMBLY
520 GALLON TANK, 500 WATER, 20 FOAM

FOR: WAUKESHA FIRE DEPARTMENT
WAUKESHA, WI

DWG NO.: 35796AD

JOB NO.	35796
SCALE	1:24
DATE	
DRAWN BY	SHU 15DEC20
CHECKED BY	ZCH 22DEC20
SHEET SIZE	D
SHEET NO.	1 OF 1

View File Created 24-JUN-2021 12:42:30