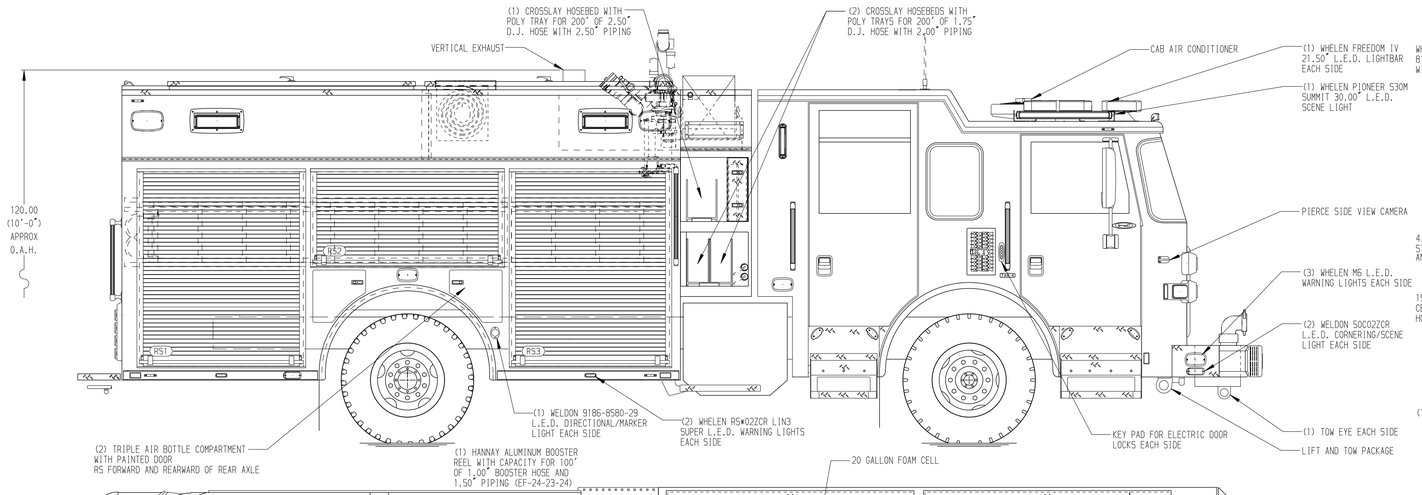

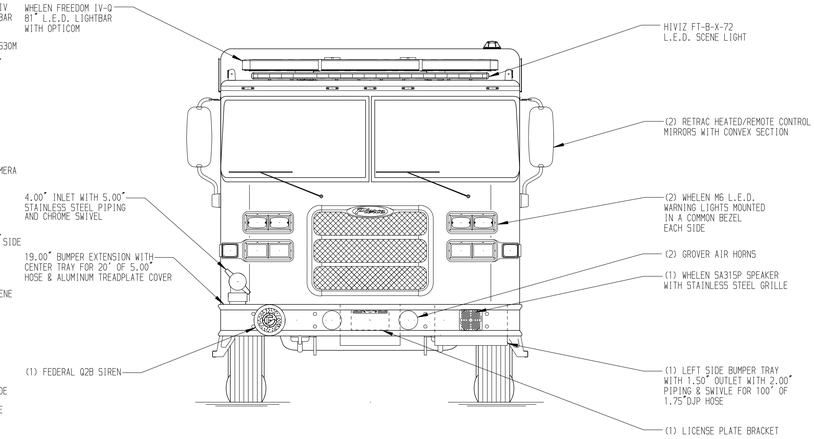

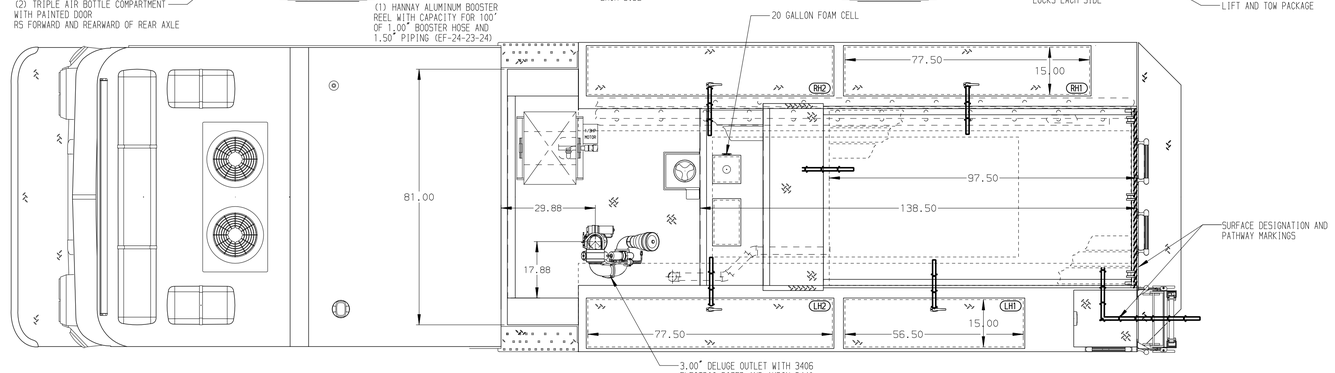

HOSEBED CAPACITIES

1. HIGH RISE PACK STORAGE
2. 300' OF 1.75" D.J. POLY HOSE
3. 600' OF 2.50" D.J. POLY HOSE
4. 1000' OF 4.00" D.J. POLY HOSE

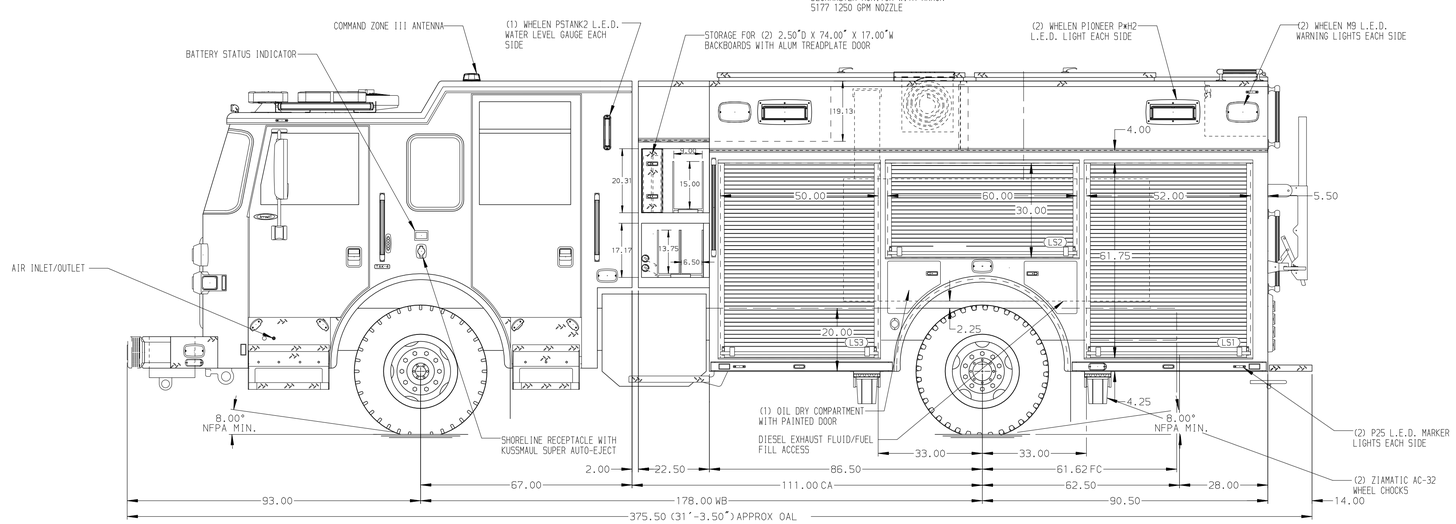

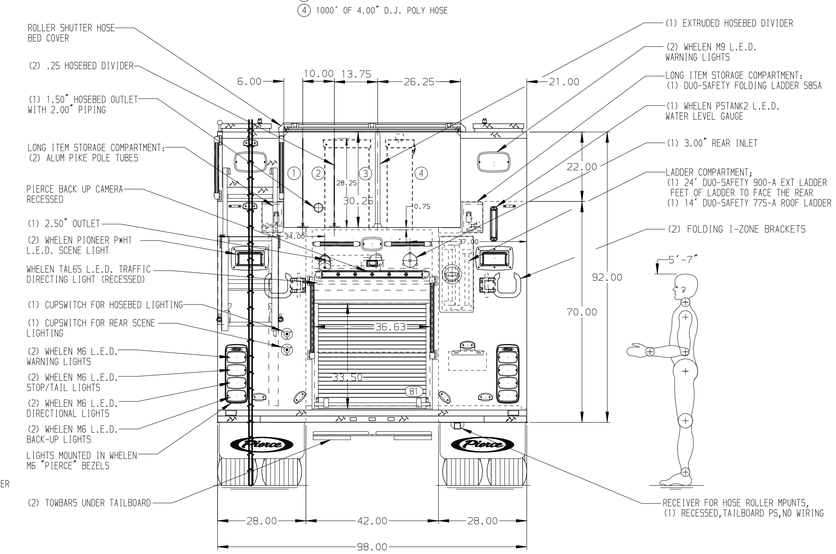

ALUMINUM BODY | MAXIMUM O.A.L. 376.50" | MAXIMUM O.A.H. 120" | FRONTAL IMPACT PROTECTION

NOTE

DIMENSIONS SHOWN ARE APPROXIMATE AND ARE SUBJECT TO MINOR DEVIATIONS AS MAY OCCUR OR BE NECESSARY IN CONSTRUCTION.
MINOR DETAILS NOT SHOWN.

1. DUAL L.E.D. LIGHT STRIPS LOCATED IN HOSE BED
2. ONE SPECIAL SIDE HEIGHT ADJUSTABLE SHELF IN COMPARTMENT; RS1
3. ONE FULL WIDTH/DEPTH ADJUSTABLE SHELF IN COMPARTMENT; LS1 & B1,; TWO IN LS3,RS1, & RS3
4. TWO ADJUSTABLE TILTING 2"HIGH SLIDE-OUT TRAY IN COMPARTMENT; LS3
5. ONE 30 DEGREE ADJUSTABLE TILT/SLIDE OUT TRAY IN COMPARTMENT; LS1 & LS2
6. ONE FLOOR MOUNTED SLIDE OUT TRAY LOCATED IN COMPARTMENT ; B1
7. ONE SLIDE-OUT ALUMINUM TOOL BOARD WITH ANGLED UPPER IN COMPARTMENT; RS3
8. ONE SLIDE-OUT ALUMINUM TOOL BOARD IN COMPARTMENT; LS1
9. ONE SWING-OUT ALUMINUM TOOL BOARD IN COMPARTMENT; RS2
10. ONE CTECH (1) DRAWER IN COMPARTMENT; RS1
11. ONE CTECH DIVDER KIT 3 IN COMPARTMENT; RS1
12. TWO ZICO SCBA BRACKETS ON COMPARTMENT RS3
13. THREE EXTINGISHER RACKS IN COMPARTMENT; LS1 & RS3
14. PAC TRAC ON BACK WALL OF COMPARTMENTS RS2 & RS3
15. PARTITION BETWEEN COMPARTMENTS LS1/B1 AND RS1/B1
16. ONE VERTICAL PARTITION IN COMPARTMENT; LS1

REV	DATE	BY	CH
5	21MAY21	JRC	NPE
4	4MAY21	JRC	NPE
3	25MAR21	JRC	NPE
2	21JAN21	JRC	WKL
1	15JAN21	CDU	PHA

CHASSIS DATA — MAKE: PIERCE — MODEL: ARROW XT

Pierce MANUFACTURING INC.

TITLE: 1500-D-520P, 500G WATER W/20G FOAM, 177" RESCUE PUC (3) CROSSLAY, LADDERS THRU BODY, DELUGE

FOR: NEWPORT BEACH FIRE DEPARTMENT, NEWPORT BEACH, CALIFORNIA

DWG NO.: 35795AD

JOB NO.	35795 (01-02)
SCALE	1:24
DATE	
DRAWN BY	JRC 11JAN21
CHECKED BY	CDU 11JAN21
SHEET SIZE	D
SHEET NO.	1 OF 1

View File Created 26-MAY-2021 14:14:59