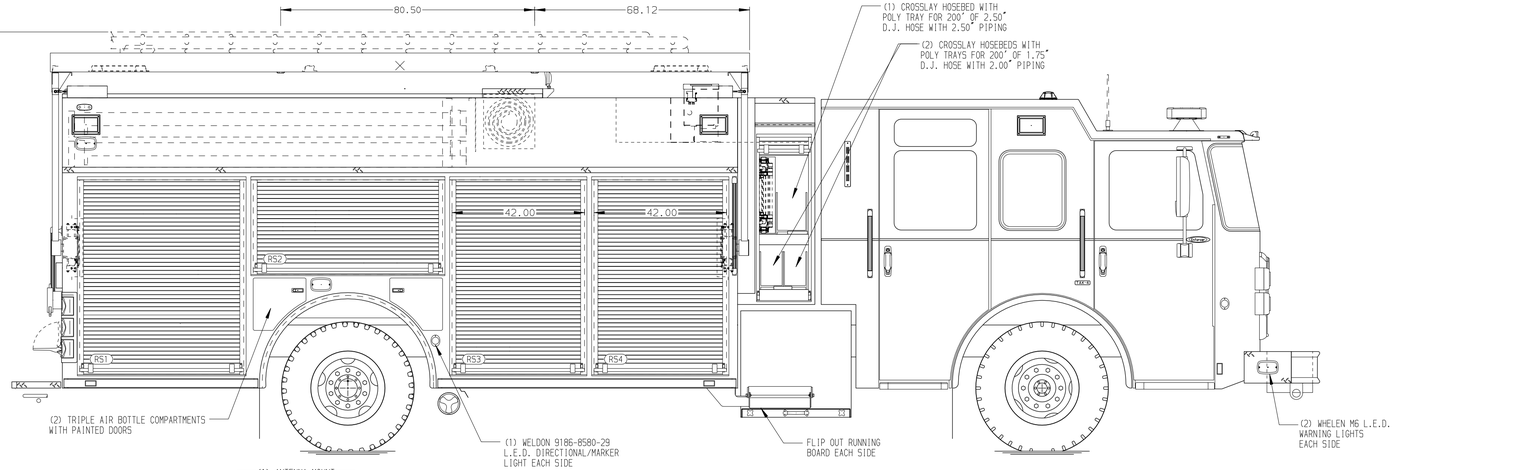

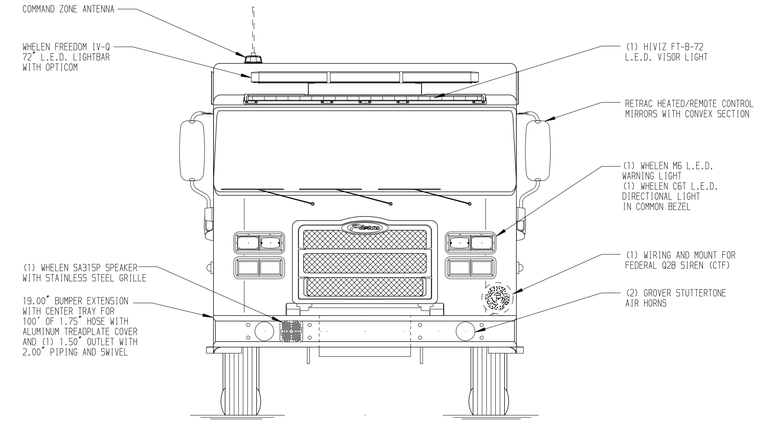

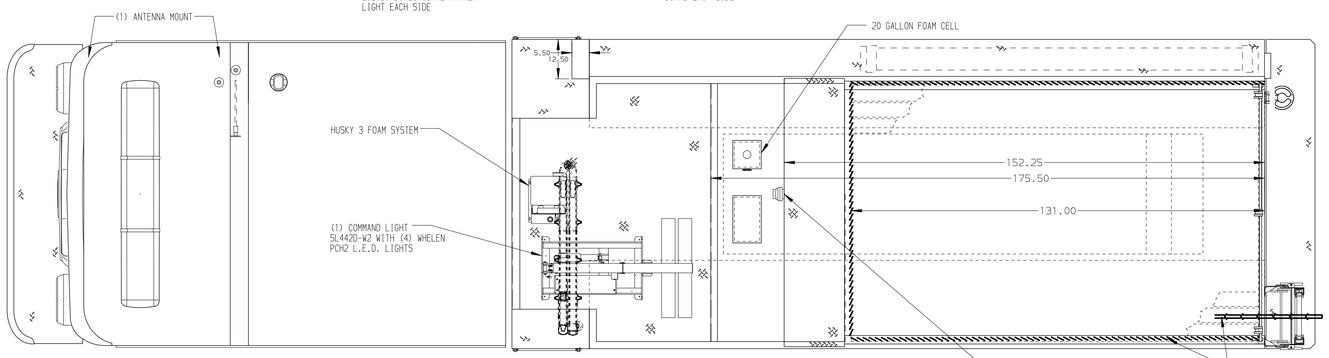

HOSEBED CAPACITIES

1. 200' OF 2.50" D.J.POLY HOSE
2. 500' OF 5.00" D.J.POLY HOSE
3. 200' OF 2.50" D.J.POLY HOSE

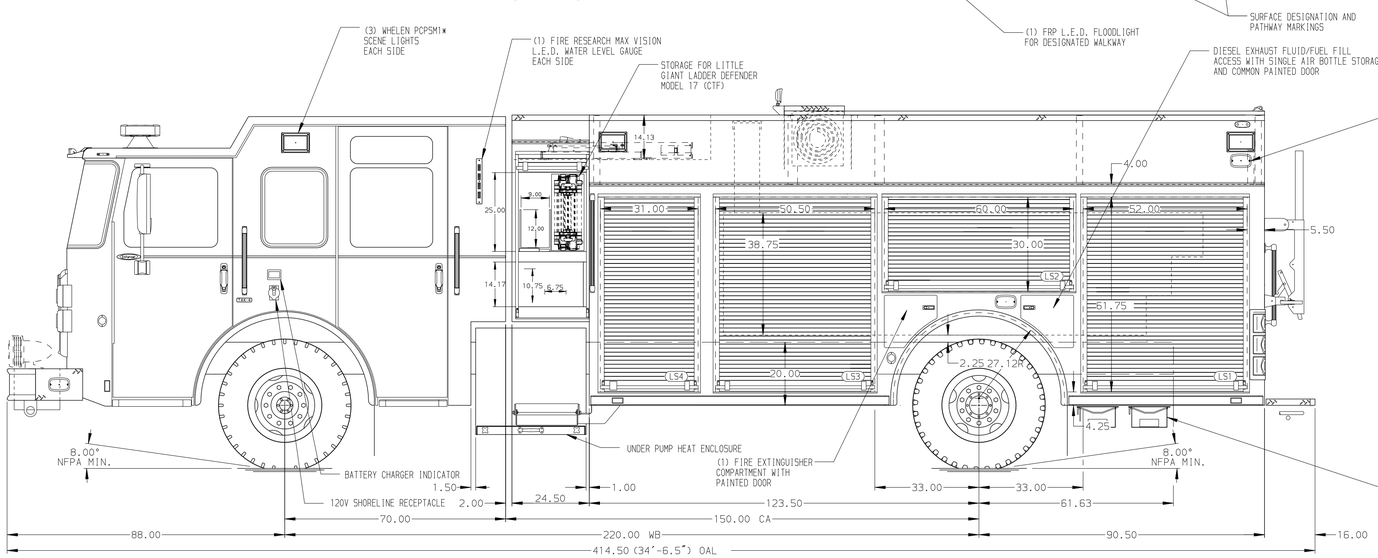

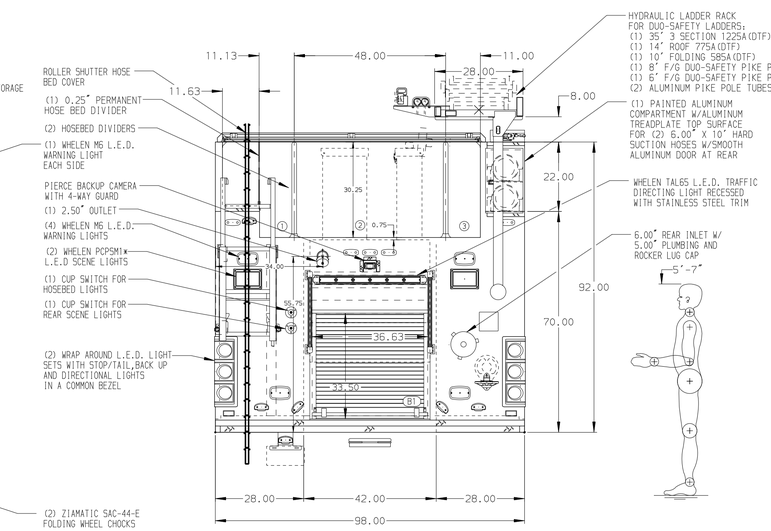

ALUMINUM BODY

SIDE ROLL AND FRONTAL IMPACT PROTECTION

NOTE

DIMENSIONS SHOWN ARE APPROXIMATE AND ARE SUBJECT TO MINOR DEVIATIONS AS MAY OCCUR OR BE NECESSARY IN CONSTRUCTION.
MINOR DETAILS NOT SHOWN.

1. KUSSMAUL PUMP PLUS LOCATED IN COMPARTMENT LS3
2. DUAL L.E.D. LIGHT STRIPS LOCATED IN HOSE BED
3. ONE FULL WIDTH/DEPTH ADJUSTABLE SHELF IN COMPARTMENTS LS1, LS3, RS1 AND RS4
4. ONE ADJUSTABLE TILTING SLIDE-OUT TRAY IN COMPARTMENTS LS1, LS3, RS1, RS2 AND RS4
5. ONE FLOOR MOUNTED SLIDE-OUT TRAY IN COMPARTMENTS LS1 AND RS4
6. TWO SLIDE-OUT TOOL BOARDS WITH PEGBOARD PATTERN IN COMPARTMENT RS3
7. CTECH DRAWER ASSEMBLY IN COMPARTMENT LS3
8. ONE 120V 6-PLACE RECEPTACLE STRIP LOCATED IN EMS CABINET AND CAB
9. AIR INLET WITH DISCONNECT COUPLING LOCATED IN DS STEP WELL
10. ONE SWING-OUT TOOLBOARD IN COMPARTMENT LS2
11. PARTITION BETWEEN RS1/B1
12. ONE 120V DUPLEX RECEPTACLE LOCATED IN LS1, LS3 AND RS4

REV	DATE	BY	CH
7	25JUN21	LME	JGO
6	04MAY21	LME	CWI
5	06APR21	LME	JGO
4	09DEC20	LME	KOU

CHASSIS DATA — MAKE: PIERCE — MODEL: ENFORCER

Pierce MANUFACTURING INC.

TITLE: 1500-D-770, 750 WATER/20 FOAM, 214" BODY (3)CROSSLAYS, FOAM SYSTEM, LIGHT TOWER

FOR: COLD SPRING FIRE DEPARTMENT, COLD SPRING, MINNESOTA

DWG NO.: 35701AD

JOB NO.	35701
SCALE 1:24	DATE
DRAWN BY LME	03DEC20
CHECKED BY KOU	03DEC20
SHEET SIZE D	SHEET NO. 1 OF 1

View File Created 25-JUN-2021 10:46:00