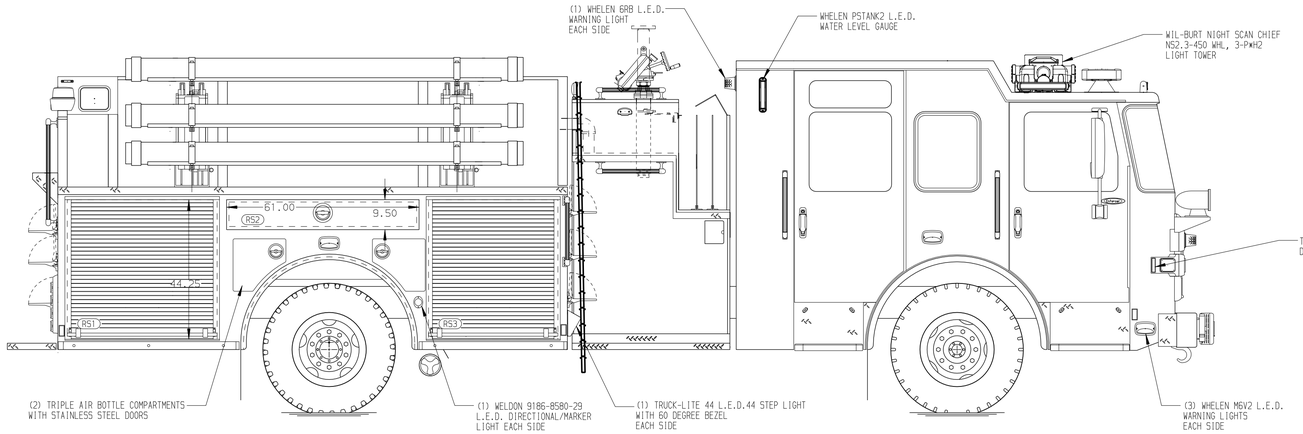

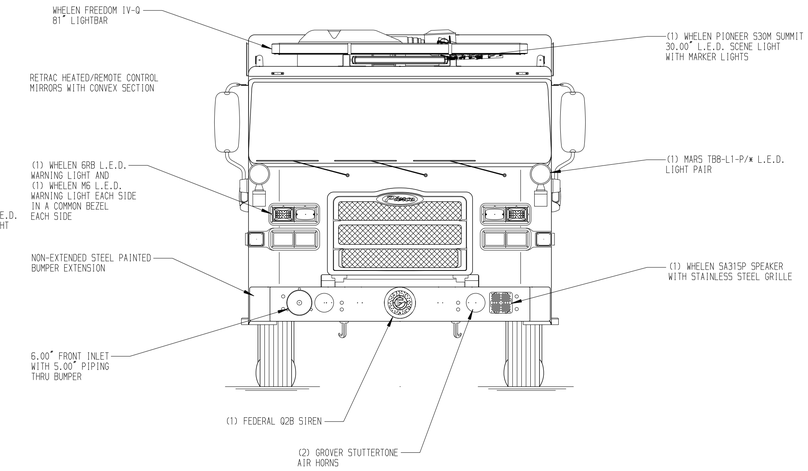

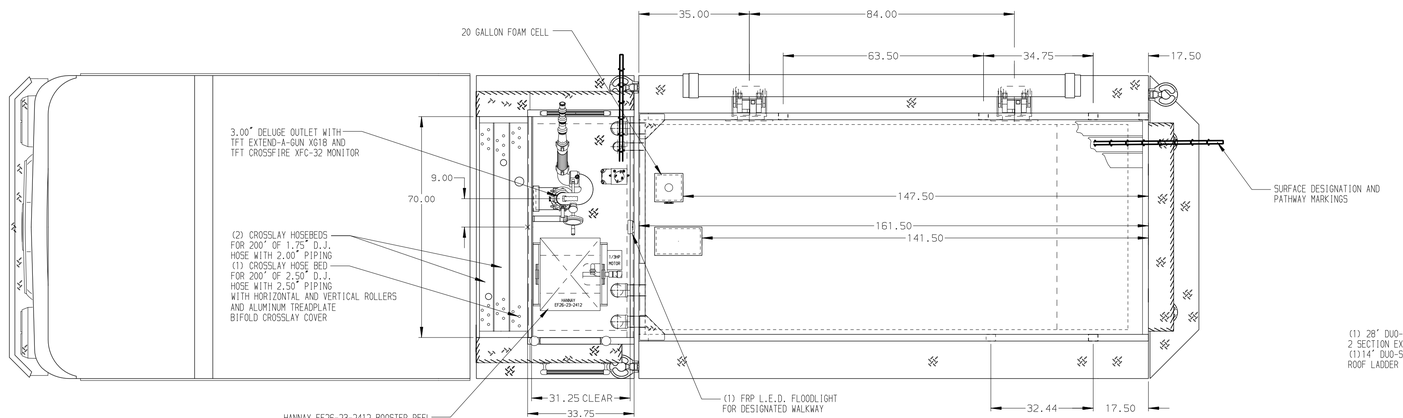

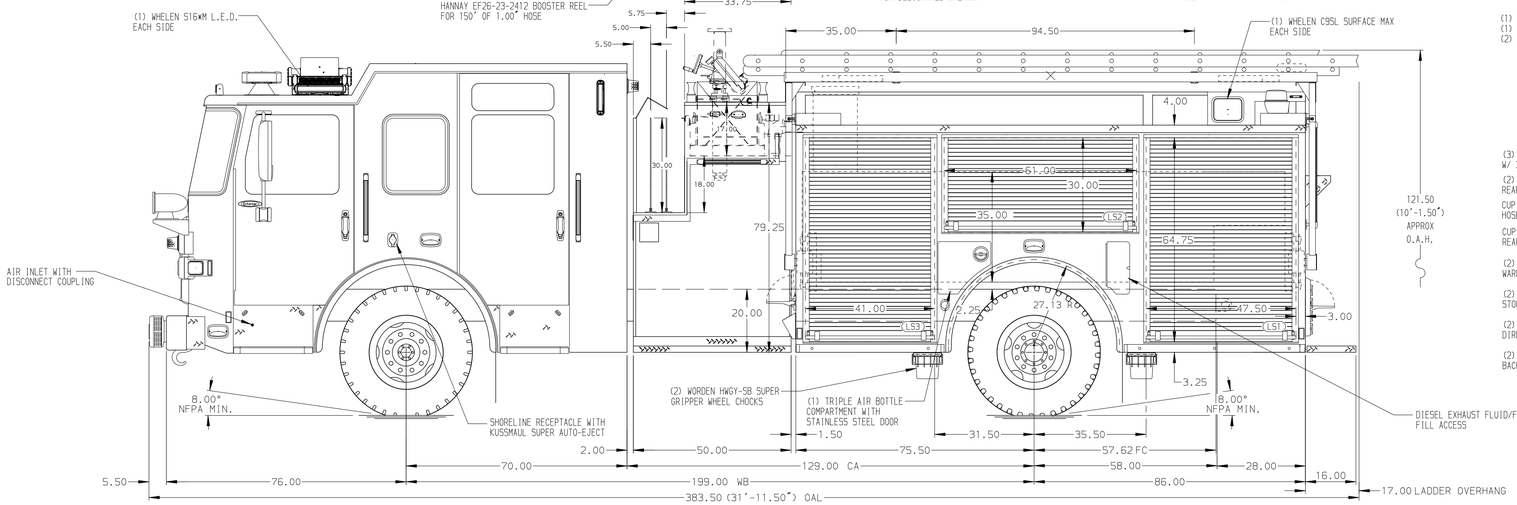

HOSEBED CAPACITIES

1. 200' OF 2.50" D.J. POLY HOSE
2. 400' OF 3.00" D.J. POLY HOSE
3. 1500' OF 5.00" D.J. POLY HOSE
4. 300' OF 1.75" D.J. POLY HOSE
5. 200' OF 2.50" D.J. POLY HOSE

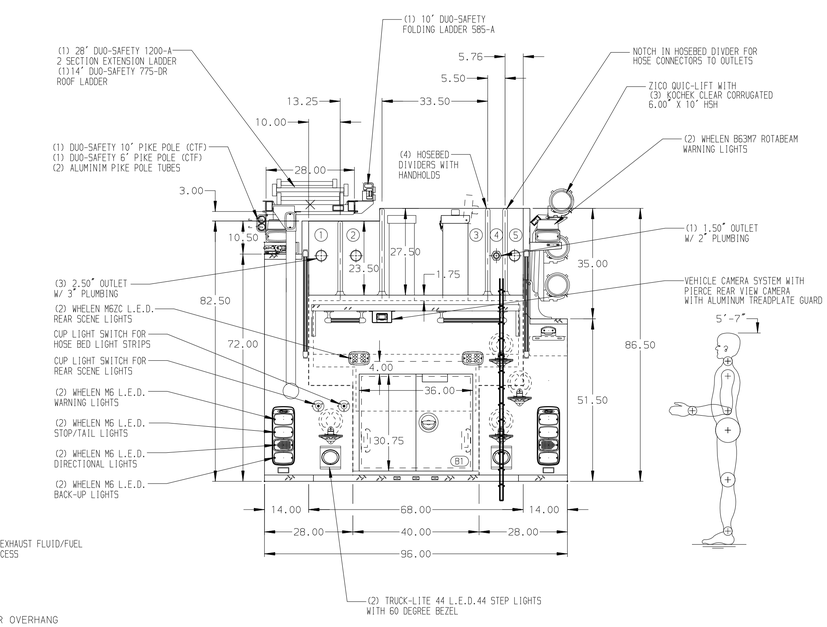

ALUMINUM BODY

MAXIMUM O.A.L. 390.00"

SIDE ROLL AND FRONTAL IMPACT PROTECTION

NOTE

DIMENSIONS SHOWN ARE APPROXIMATE AND ARE SUBJECT TO MINOR DEVIATIONS AS MAY OCCUR OR BE NECESSARY IN CONSTRUCTION.
MINOR DETAILS NOT SHOWN.

1. BATTERY CHARGER LOCATED BEHIND DRIVER'S CAB SEAT
2. COMPRESSOR LOCATED BEHIND OFFICER'S CAB SEAT
3. BATTERY CHARGER INDICATOR LOCATED ON DRIVER'S SEAT RISER
4. DUAL L.E.D. LIGHT STRIPS LOCATED IN HOSE BED
5. BRUSHED STAINLESS STEEL SCUFFPLATE INSIDE BODY COMPARTMENT DOORS ON RS2 AND B1
6. DRIP PAN GUARD FOR ROLL-UP DOOR LOCATED LS1, LS2, LS3, RS1, AND RS3
7. ONE FULL WIDTH/DEPTH ADJUSTABLE SHELF IN COMPARTMENT LS1, LS3, RS3, AND B1
8. PAC TRAC ON THE REAR WALL OF COMPARTMENT LS3
9. SCBA RACK FOR 4 BOTTLES IN COMPARTMENT RS3
10. HORIZONTAL EQUIPMENT MOUNTING TRACKS IN COMPARTMENT LS2
11. DRI-DECK MATTING ON FLOOR IN ALL COMPARTMENTS EXCEPT RS1
12. DRI-DECK MATTING ON COMPARTMENT TRAYS AND SHELVES
13. 120V 6-PLACE RECEPTACLE STRIP LOCATED IN COMPARTMENT LS1

REV	DATE	BY	CH
7	04MAY21	SAM	DTS
6	26FEB21	SAM	DTS
5	04FEB21	SAM	DTS
4	06NOV20	CDU	KOU

CHASSIS DATA
MAKE: PIERCE
MODEL: ENFORCER

Pierce MANUFACTURING INC.

TITLE: 1500-D-1020P, 1000 GAL OF WATER W/ 20 GAL FOAM CELL 161" BODY, HYDRAULIC LADDER RACK, (3) CROSSLAYS
FOR: OLD SAYBROOK VOLUNTEER FIRE DEPARTMENT OLD SAYBROOK, CONNECTICUT
DWG NO.: 35669AD

JOB NO.	35669 01-02
SCALE	1:24
DATE	
DRAWN BY	SAM 29OCT20
CHECKED BY	CDU 30OCT20
SHEET SIZE	D
SHEET NO.	1 OF 1

View File Created 04-MAY-2021 11:32:28