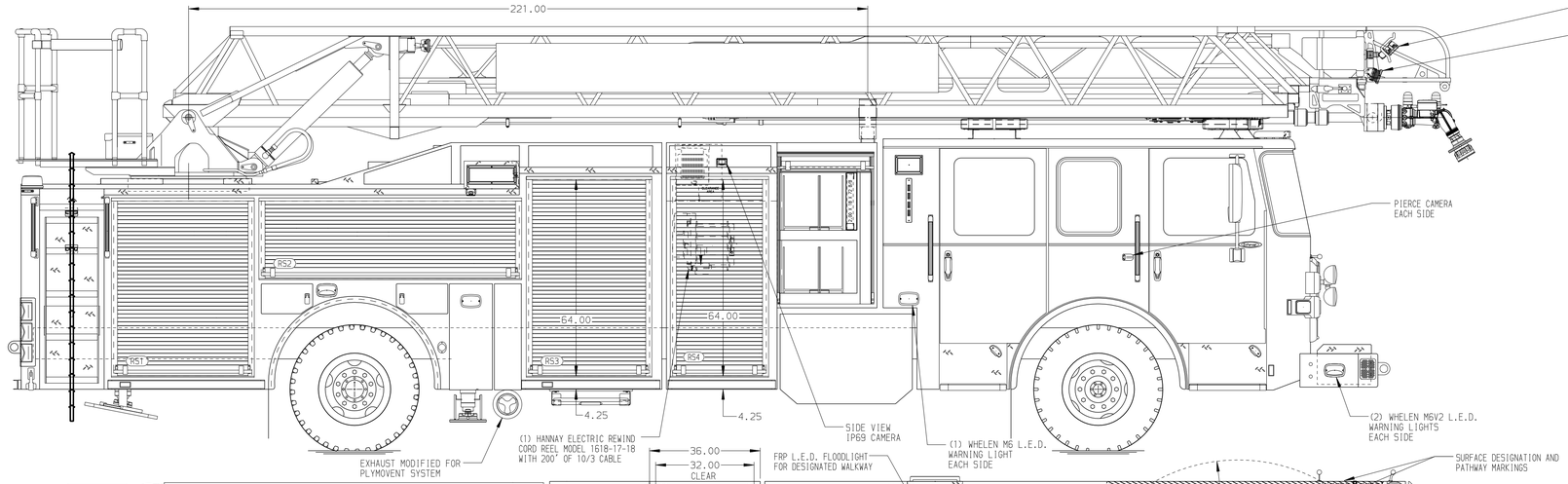

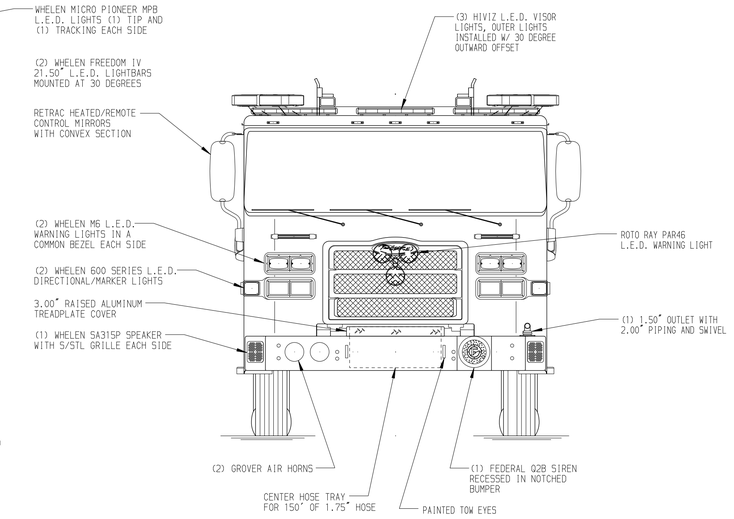

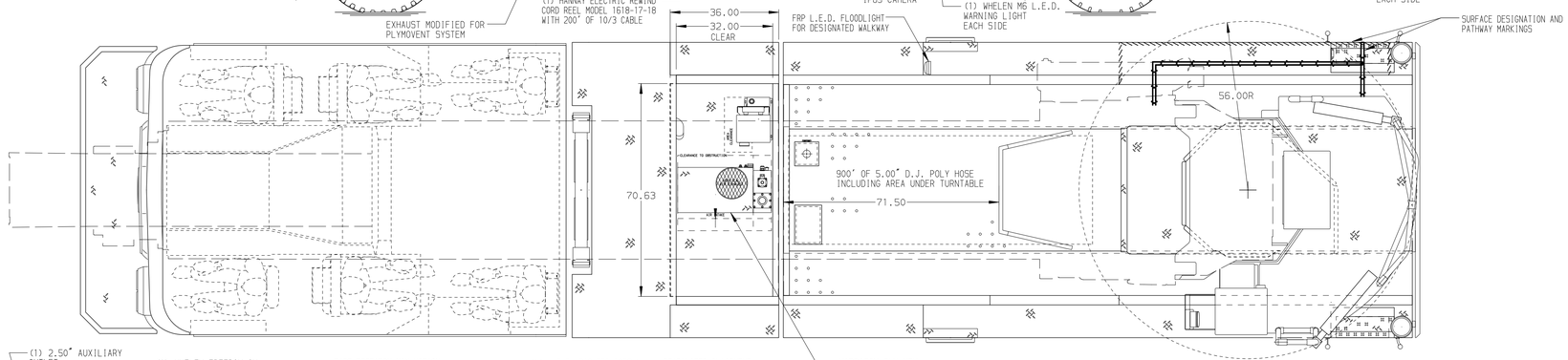

BODY	WATER TANK
107' ASL Aluminum Body PUC	500 Gallon Poly Water Tank
COMPT,LEFT SIDE FRONT	Foam System
Full Height Rollup Forward	Husky 3 Single Agent Foam System
COMPT,LEFT SIDE REAR	Foam Cell
Full Height Rollup Rearward	25 Gallon Foam Cell, Non-Reduced Water, PUC
COMPT,RIGHT SIDE FRONT	
Full Height Rollup Forward	
COMPT,RIGHT SIDE REAR	
Full Height Rollup Rearward	

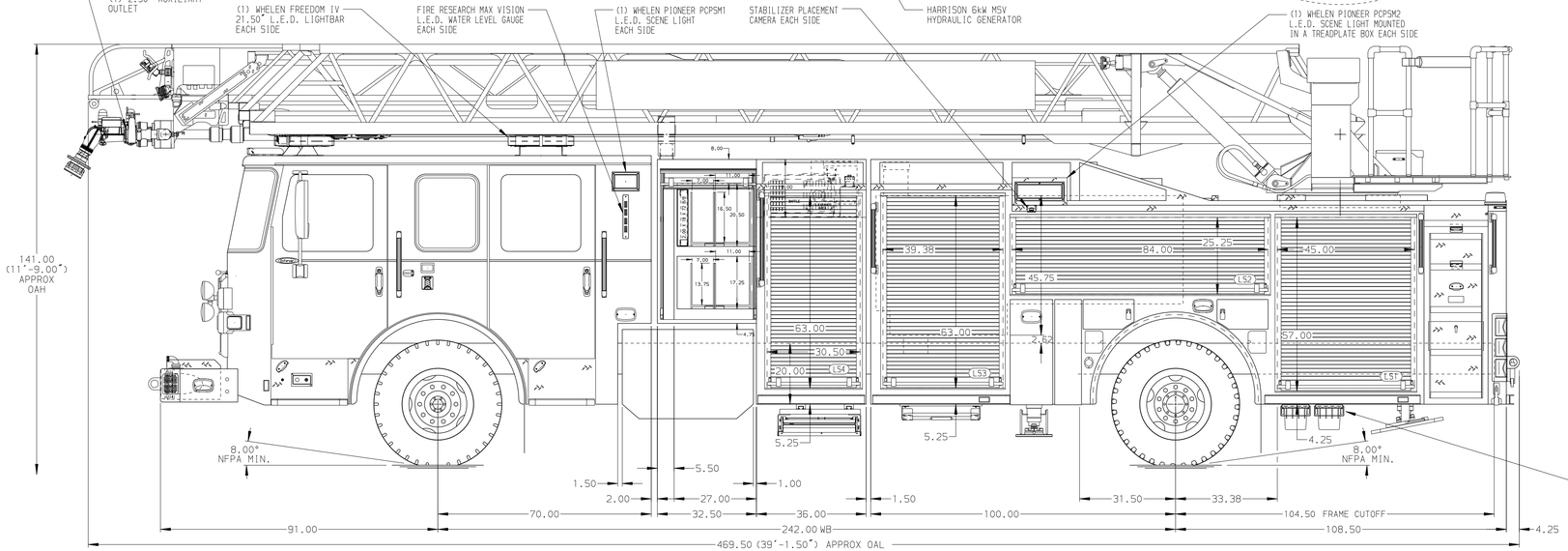

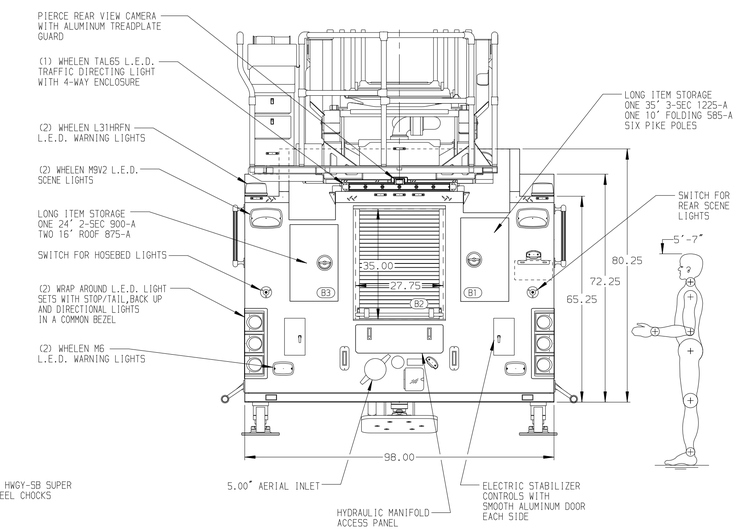

CHASSIS	CAB	AXLE,FRONT,CUSTOM	TRANSMISSION	PUMPHOUSE	CROSSLAYS,LOWER	CROSSLAYS,UPPER	SAFETY
Enforcer Chassis, PUC	7000 Enforcer Cab, PUC	23,000 Lb Dana Axle	Allison 5th Gen, 4000 EVS P	Control Zone, PAL/PAP PUC	(1) 1.50" Crosslay w/Poly Tray (200' of 1.75" D.J. Poly)	(1) 1.50" Crosslay w/Poly Tray (200' of 1.75" D.J. Poly)	Side Roll and Frontal Impact Protection
ENGINE	BUMPER	AXLE,REAR		PUMP	(1) 2.50" Crosslay W/Poly Tray (200' of 3.00" D.J. Poly)	(1) Deadlay w/Poly Tray (200' of 3.00" D.J. Poly)	
500 HP Cummins X12 Engine	22" Extended Painted Steel	33,500 Lb Meritor Axle		1500 GPM Pierce PUC			

NOTE

DIMENSIONS SHOWN ARE APPROXIMATE AND ARE SUBJECT TO MINOR DEVIATIONS AS MAY OCCUR OR BE NECESSARY IN CONSTRUCTION.
MINOR DETAILS NOT SHOWN.

1. 20A BLUE SEA SURE-EJECT SHORELINE RECEPTACLE LOCATED ON DRIVER SIDE OF THE CAB
2. AIR INLET WITH DISCONNECT COUPLING IN THE DRIVER SIDE STEPWELL
3. AIR OUTLET WITH SHUT-OFF VALVE IN THE DRIVER SIDE STEPWELL
4. BATTERY CHARGER LOCATED BEHIND DRIVER SEAT
5. BATTERY CHARGE INDICATOR LOCATED ON DRIVER SIDE OF THE CAB
6. DUAL L.E.D. LIGHT STRIPS LOCATED IN HOSE BED
7. PULL STRAP FOR ROLL-UP DOOR FOR COMPARTMENTS PER SHOP ORDER
8. SEVEN ADJUSTABLE SHELVES IN COMPARTMENTS PER SHOP ORDER
9. FOUR FLOOR MOUNTED SLIDE-OUT TRAYS IN COMPARTMENTS PER SHOP ORDER
10. ONE ADJUSTABLE TILTING SLIDE-OUT TRAY IN COMPARTMENT PER SHOP ORDER
11. ONE SINGLE SWING OUT TOOL GRID SYSTEM IN COMPARTMENT PER SHOP ORDER
12. CTECH DRAWER ASSEMBLY IN COMPARTMENT
13. TWO POLY TOOL BOXES IN COMPARTMENT PER SHOP ORDER
14. TWO ADJUSTABLE VERTICAL PARTITIONS IN COMPARTMENTS PER SHOP ORDER
15. ONE ALUMINUM PEGBOARD ON BACK WALL COMPARTMENT PER SHOP ORDER
16. HOSE STORAGE RACK WITH ADJUSTABLE DIVIDERS FOR (2) ROLLED HOSE IN COMPARTMENT PER SHOP ORDER
17. ONE SLIDE-OUT FLOOR MOUNTED OIL DRY HOPPER IN COMPARTMENT PER SHOP ORDER
18. MOUNTING FOR 13' LITTLE GIANT LADDER IN COMPARTMENT RS4 PER SHOP ORDER
19. CIRCUIT BREAKER PANEL IN COMPARTMENT PER SHOP ORDER
20. ONE 120V DUPLEX RECEPTACLE (SHORELINE) IN CAB PER SHOP ORDER
21. ONE 120V DUPLEX RECEPTACLE (GENERATOR) IN COMPARTMENT PER SHOP ORDER
22. ONE 120V 6-PLACE RECEPTACLE STRIP (SHORELINE) IN COMPARTMENT PER SHOP ORDER
23. 120V POWER TO AERIAL TIP
24. WIRELESS CAMERA LOCATED AT AERIAL EGRESS
25. NON-RAISED AERIAL PEDESTAL
26. LIFTING EYE ROPE RESCUE ATTACHMENT AT AERIAL TIP
27. LYFEPULLEY RESCUE SYSTEM AT AERIAL TIP
28. AIR HORN CONTROL AT AERIAL TURNTABLE
29. WIRELESS MONITOR CONTROLS AT PUMP PANEL
30. 1500 GPM HIGH FLOW WATERWAY
31. NO LIMITED RETRACTION REQUIRED
32. THREE ADDITIONAL POLY CROSSLAY TRAYS SHIPPED LOOSE

REV	DATE	BY	CH
7	12FEB21	TKA	BSE
6	08JAN21	TKA	CWI

CHASSIS DATA
MAKE: PIERCE
MODEL: ENFORCER

Pierce MANUFACTURING INC.

TITLE: 107' ASCENDANT AERIAL LADDER AND BODY ASSEMBLY
FOR: COOKEVILLE FIRE DEPARTMENT, COOKEVILLE, TENNESSEE
DWG NO.: 35665AD

JOB NO. 35665
SCALE 1:24
DATE
DRAWN BY TKA 12OCT20
CHECKED BY CRI 13OCT20
SHEET SIZE D
SHEET NO. 1 OF 1

View File Created 15-FEB-2021 10:23:07