PUMPER

BODY
Long Aluminum 2nd Gen Pumper

CHASSIS
Enforcer Chassis

CHASSIS

AXLE, FRONT, CUSTOM
20,000 lb Dana Axle

AXLE, REAR
27,000 lb Dana Axle

ENGINE
450 HP Cummins L9 Engine

TRANSMISSION
Allison 5th Gen, 3000 EVS P

BUMPER
26" Extended Painted Steel

CAB
7010 Enforcer Cab

BODY

WATER TANK
1000 Gallon Poly Water Tank

COMPT, PUMPER, REAR
44.50" FF RollUp Rear Compt

COMPT, PUMPER, LEFT SIDE
161" RollUp Full Height Front & Rear FDLER

COMPT, PUMPER, RIGHT SIDE
161" RollUp Full Height Front & Rear FDLER

FIRE SUPPRESSION

PUMPHOUSE
45" Control Zone Side Mount

PUMP
1500 GPM Waterous CSU

CROSSLAYS, 1.50"
(2) 1.50" Standard Capacity

CROSSLAYS, 2.50"
(1) 2.50" Standard Capacity

SPEEDLAYS
Speedlays Not Required

GENERATOR
Generator Not Required

Foam System
Foam System Not Required

Foam Cell
Foam Cell Not Required

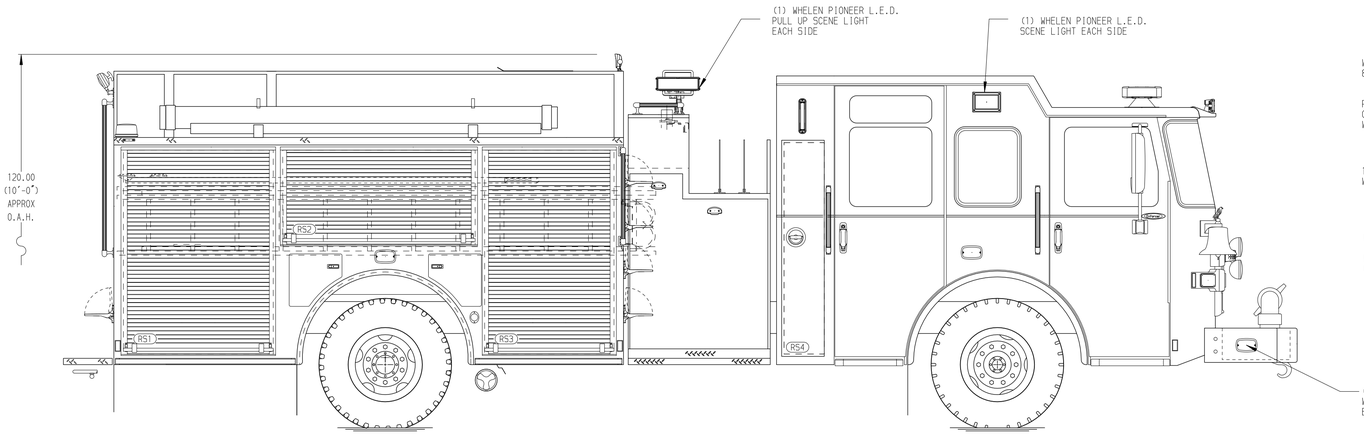

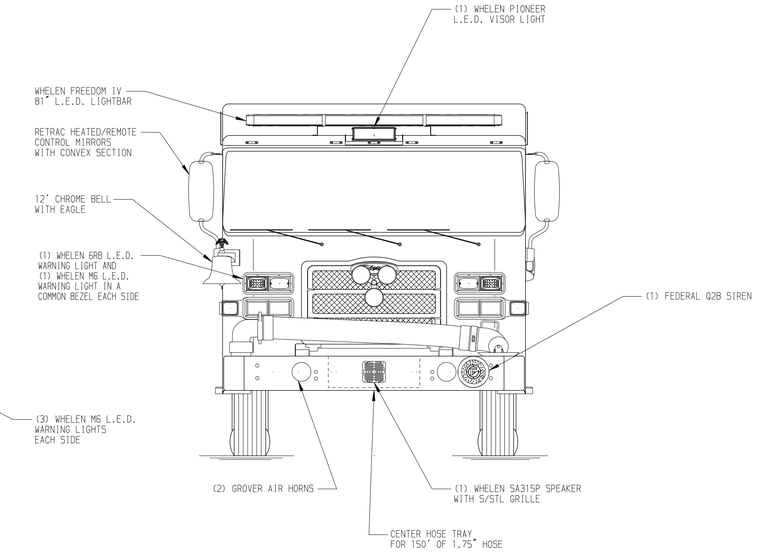

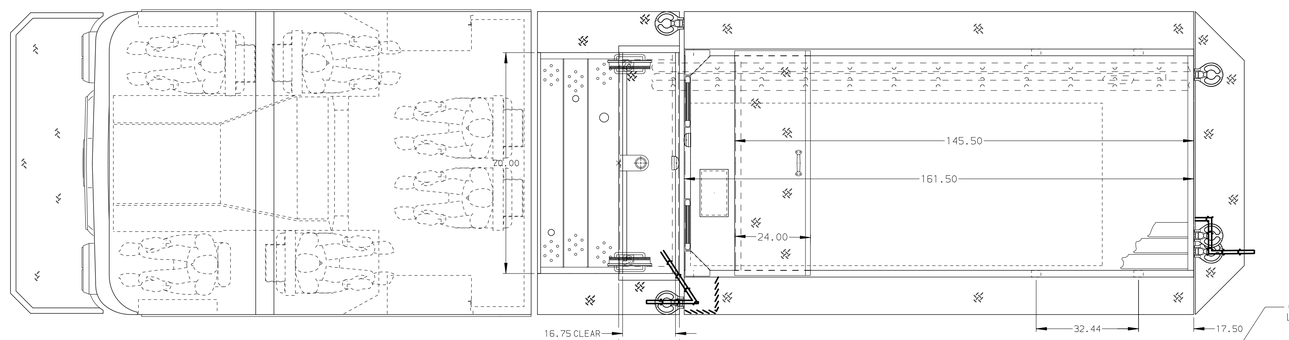

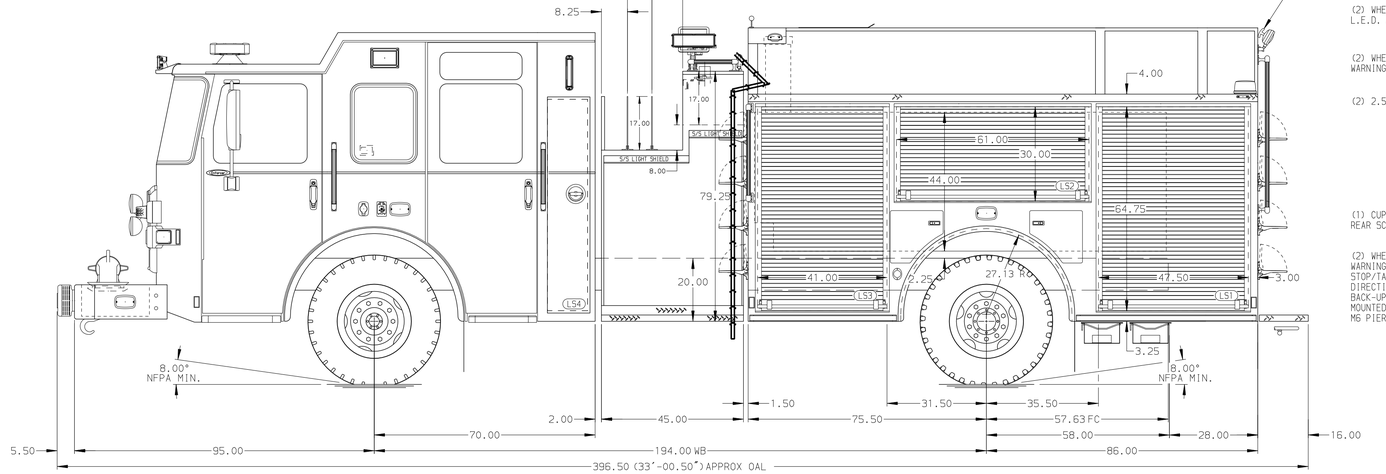

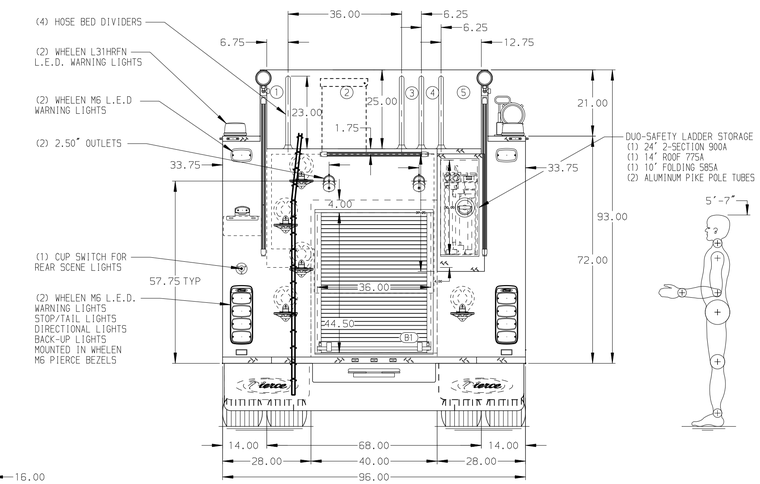

HOSEBED CAPACITY

BED 1
300' OF 2.50" D.J. POLY HOSE

BED 2
1000' OF 5.00" D.J. POLY HOSE

BED 3
200' OF 1.75" D.J. POLY HOSE

BED 4
200' OF 1.75" D.J. POLY HOSE

BED 5
600' OF 3.00" D.J. POLY HOSE

NOTE

DIMENSIONS SHOWN ARE APPROXIMATE AND ARE SUBJECT TO MINOR DEVIATIONS AS MAY OCCUR OR BE NECESSARY IN CONSTRUCTION.
MINOR DETAILS NOT SHOWN.

1. ONE 1.50 OUTLET WITH 2.00 PIPING AND SWIVEL LOCATED IN CENTER BUMPER TRAY
2. SHORELINE RECEPTACLE WITH KUSSMAUL SUPER AUTO-EJECT LOCATED ON DRIVER SIDE OF THE CAB
3. AIR INLET WITH KUSSMAUL AIR EJECT ON DRIVERS SIDE ABOVE FRONT WHEEL
4. BATTERY CHARGER LOCATED IN COMPARTMENT PER SHOP ORDER
5. BATTERY CHARGE INDICATOR LOCATED ON THE DRIVER SIDE THROUGH WINDOW
6. ADJUSTABLE SHELVES IN COMPARTMENTS PER SHOP ORDER
7. ONE FLOOR MOUNTED SLIDE-OUT TRAY IN COMPARTMENT PER SHOP ORDER

REV	DATE	BY	CH
B	18DEC20	MMF	JJR
A	05NOV20	MMF	JJR

CHASSIS DATA –
MAKE PIERCE
MODEL ENFORCER

Pierce MANUFACTURING INC.

TITLE Pierce Pumper Approval Drawing
FOR Lapel-Stony Creek Township Fire Terr
–

DWG NO. 35586AD

JOB NO. 35586
SCALE 1:24
DATE
DRAWN BY MMF 14SEP20
CHECKED BY COL 15SEP20
SHEET SIZE D
SHEET NO. 1 OF 1

View File Created 18-DEC-2020 12:36:41