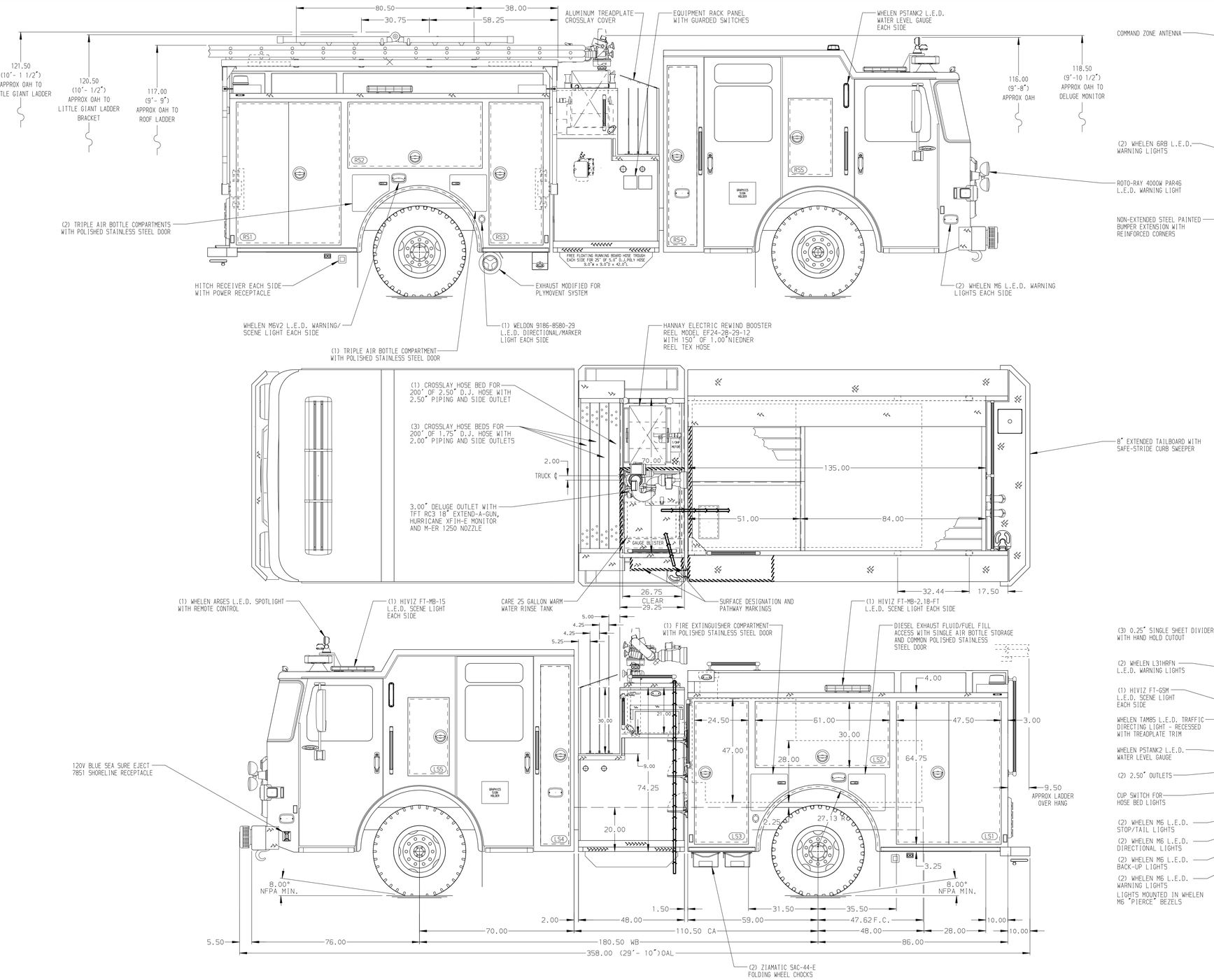


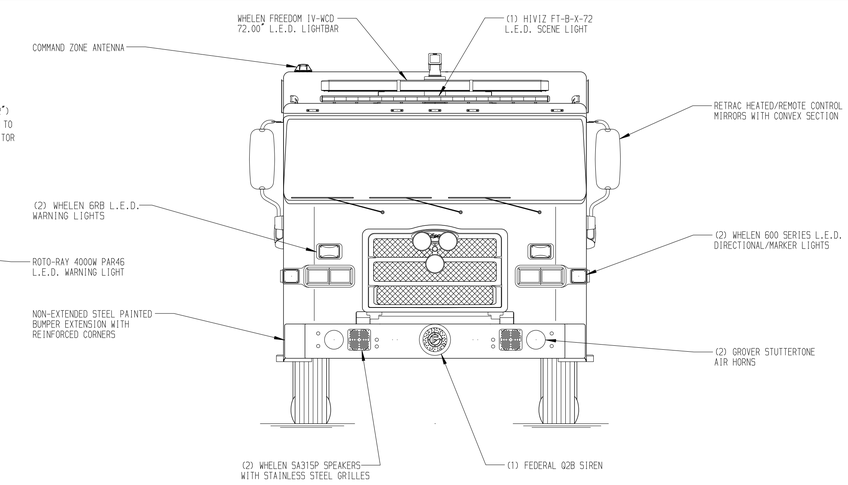


HOSEBED CAPACITIES

1. 150' OF 1.75" D.J. POLY HOSE IN TRAY
   150' OF 1.75" D.J. POLY HOSE IN TRAY
2. 200' OF 2.50" D.J. POLY HOSE
3. 200' OF 2.50" D.J. POLY HOSE
4. 500' OF 3.00" D.J. POLY HOSE
5. 800' OF 5.00" D.J. POLY HOSE

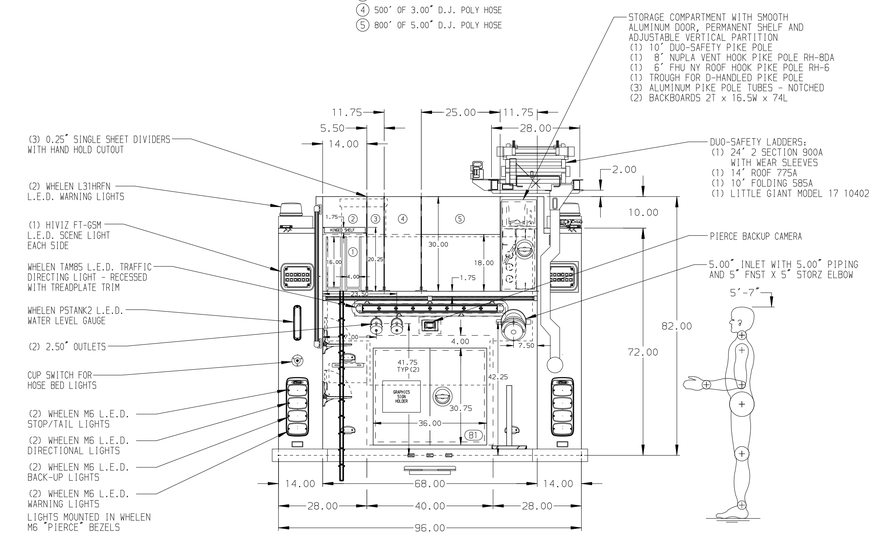


ALUMINUM BODY

MAXIMUM O.A.H. 119.00"
(WITHOUT LITTLE GIANT LADDER)

SIDE ROLL AND FRONTAL IMPACT PROTECTION

**Pierce MANUFACTURING INC.**

| | |
|---|---|
| JOB NO. | 35562 |
| SCALE | 1:24 |
| DATE | 270CT20 |
| DRAWN BY | JRO |
| CHECKED BY | WKL |
| SHEET SIZE | D |
| SHEET NO. | 1 OF 1 |

TITLE: 1500-750 WATER, 145" BODY, SIDE CONTROL, CROSSLAYS HYDRAULIC LADDER RACK, DELUGE, BOOSTER REEL

FOR: THURSTON F.D. 8 SOUTH BAY OLYMPIA, WASHINGTON

DWG NO. 35562AD

CHASSIS DATA — MAKE: PIERCE — MODEL: ENFORCER

| REV | DATE | BY | CH |
|---|---|---|---|
| D | 05MAR21 | JRO | GKH |
| C | 03MAR21 | JRO | GKH |
| B | 26JAN21 | JRO | GKH |
| A | 300CT20 | JRO | EGO |

NOTE

DIMENSIONS SHOWN ARE APPROXIMATE AND ARE SUBJECT TO MINOR DEVIATIONS AS MAY OCCUR OR BE NECESSARY IN CONSTRUCTION.
MINOR DETAILS NOT SHOWN.

1. BATTERY CHARGER CENTERED IN FORWARD FACING CREW CAB SEAT RISER
2. BATTERY CHARGER INDICATOR LOCATED ON DRIVER'S SEAT RISER
3. L.E.D. DUAL LIGHT STRIPS LOCATED IN HOSE BED PER SHOP ORDER
4. PULL STRAP ON DOOR IN COMPARTMENTS LS2 AND RS2
5. REVERSED HINGED DOOR ON COMPARTMENT LS3
6. ELEVEN FULL WIDTH/DEPTH ADJUSTABLE SHELVES - THREE IN COMPARTMENT RS3, TWO IN LS1, LS3 AND RS1, ONE IN LS2 AND B1
7. ONE FLOOR MOUNTED SLIDE-OUT TRAY IN COMPARTMENTS LS1 AND RS1
8. ONE ADJUSTABLE SLIDE-OUT TRAY IN COMPARTMENT LS3
9. ONE SWING-OUT TOOL BOARD IN COMPARTMENT RS2
10. 120V DUPLEX RECEPTACLE LOCATED IN LS1 AND RS1
11. NYLATRON LINERS ON LADDER RACK CROSSMEMBERS
12. AIR INLET WITH KUSSMAUL AIR-EJECT AND WEATHERPROOF COVER - DRIVER'S STEP WELL
13. STAINLESS STEEL SCUFFPLATE ON INNER DOOR PAN IN COMPARTMENT LS3

View File Created 05-MAR-2021 14:41:23