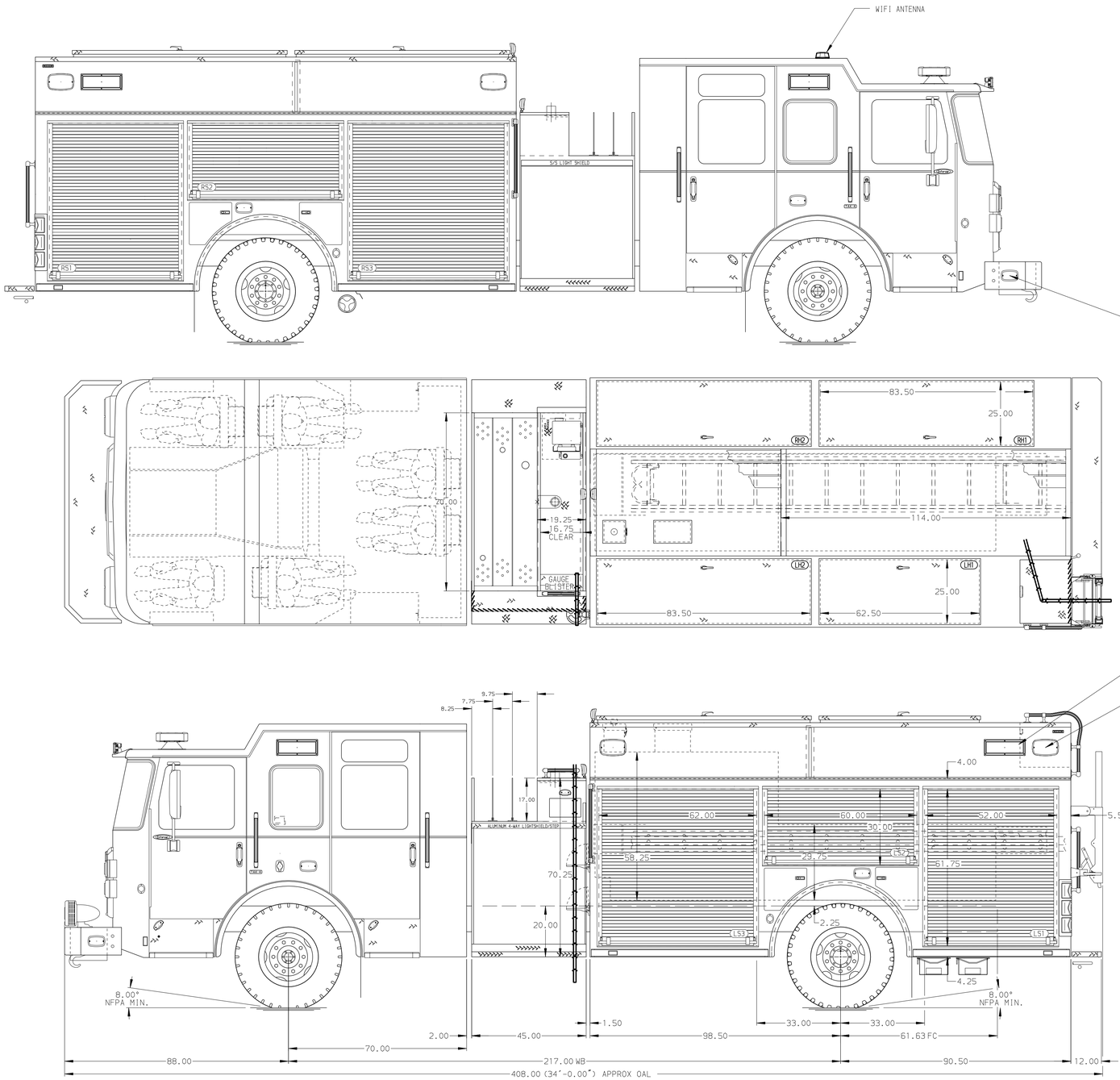

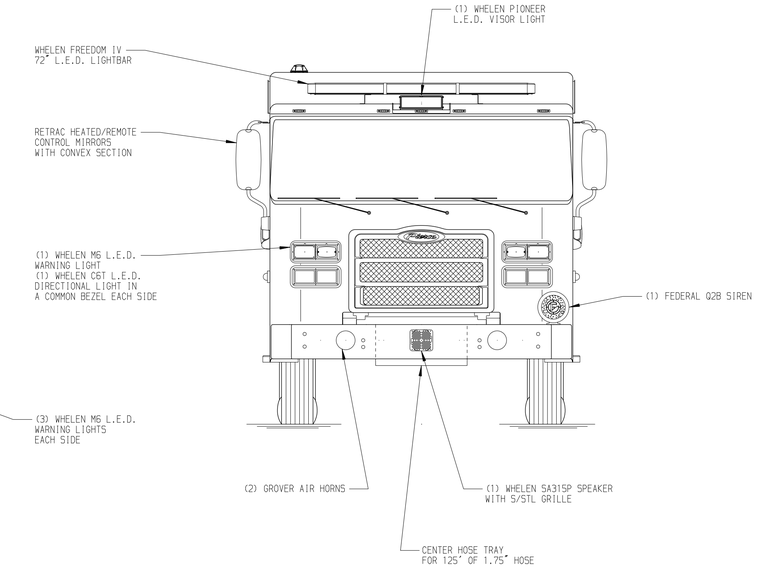

BODY	WATER TANK
Pumper, HDRP, Aluminum	750 Gallon Poly Water Tank
COMPT,LEFT SIDE	Foam System
189" Rollup Full Height & Depth Front & Rear	Husky 3 Single Agent Foam System
COMPT,RIGHT SIDE	Foam Cell
189" Rollup Full Height & Depth Front & Rear	20 Gallon Foam Cell, Not Reduced Water
COMPT,REAR	
29.50" FF Rollup Rear Compt w/Tailboard	

HOSEBED CAPACITY

BED 1
600' OF 2.50" D.J. POLY HOSE

BED 2
1000' OF 5.00" D.J. POLY HOSE

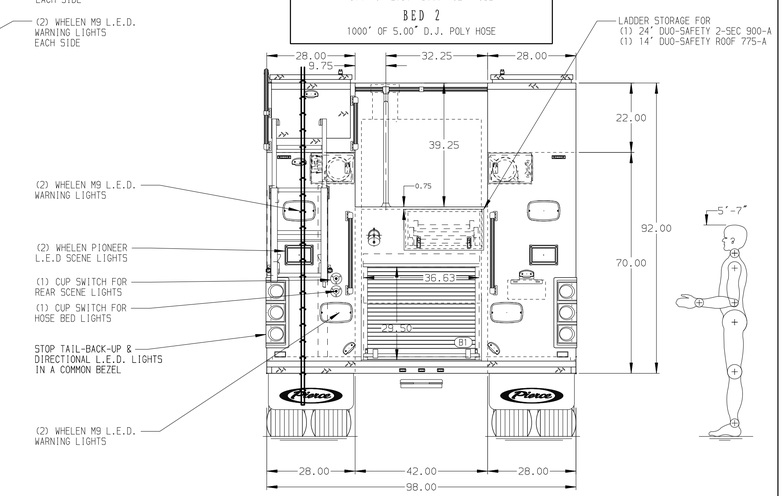

CHASSIS	CAB	AXLE,FRONT,CUSTOM	TRANSMISSION	PUMPHOUSE	CROSSLAYS,1.50"	SPEEDLAYS	SAFETY
Enforcer Chassis	7010 Enforcer Cab	19,500 Lb TAK-4 Axle	ALLison 5th Gen, 3000 EVS P	45" Control Zone Side Mount	(2) 1.50" Standard Capacity	Speedlays Not Required	Side Roll and Frontal Impact Protection
ENGINE	BUMPER	AXLE,REAR		PUMP	CROSSLAYS,2.50"	GENERATOR	
450 HP Cummins L9 Engine	19" Extended Painted Steel	27,000 Lb Dana Axle		1500 GPM Waterous CSU	(1) 2.50" Standard Capacity	Generator Not Required	

CUSTOMER APPROVAL
APPROVED BY: _____
DATE: _____

Pierce MANUFACTURING INC.

NOTE
DIMENSIONS SHOWN ARE APPROXIMATE AND ARE SUBJECT TO MINOR DEVIATIONS AS MAY OCCUR OR BE NECESSARY IN CONSTRUCTION.
MINOR DETAILS NOT SHOWN.

1. ONE 1.50 OUTLET WITH 2.00 PIPING AND SWIVEL LOCATED IN CENTER BUMPER TRAY
2. SHORELINE RECEPTACLE WITH KUSSMAUL SUPER AUTO-EJECT LOCATED ON DRIVER SIDE OF THE CAB
3. AIR INLET WITH DISCONNECT COUPLING IN THE DRIVER SIDE STEPWELL
4. BATTERY CHARGER LOCATED IN COMPARTMENT PER SHOP ORDER
5. BATTERY CHARGE INDICATOR LOCATED ON THE DRIVER SIDE THOUGH WINDOW DISPLAY

REV	DATE	BY	CH
2	26OCT20	MMF	THS
1	07AUG20	MMF	NPE

CHASSIS DATA
MAKE: PIERCE
MODEL: ENFORCER

TITLE: Pierce Pumper Approval Drawing
FOR: Pierce Field Unit, Appleton, Wisconsin
DWG NO.: 35549AD-SH1

JOB NO.	35549
SCALE	1:24
DATE	
DRAWN BY	MMF
	29JUL20
CHECKED BY	NPE
	3AUG20
SHEET SIZE	D
SHEET NO.	1 OF 2

View File Created 26-OCT-2020 10:35:47