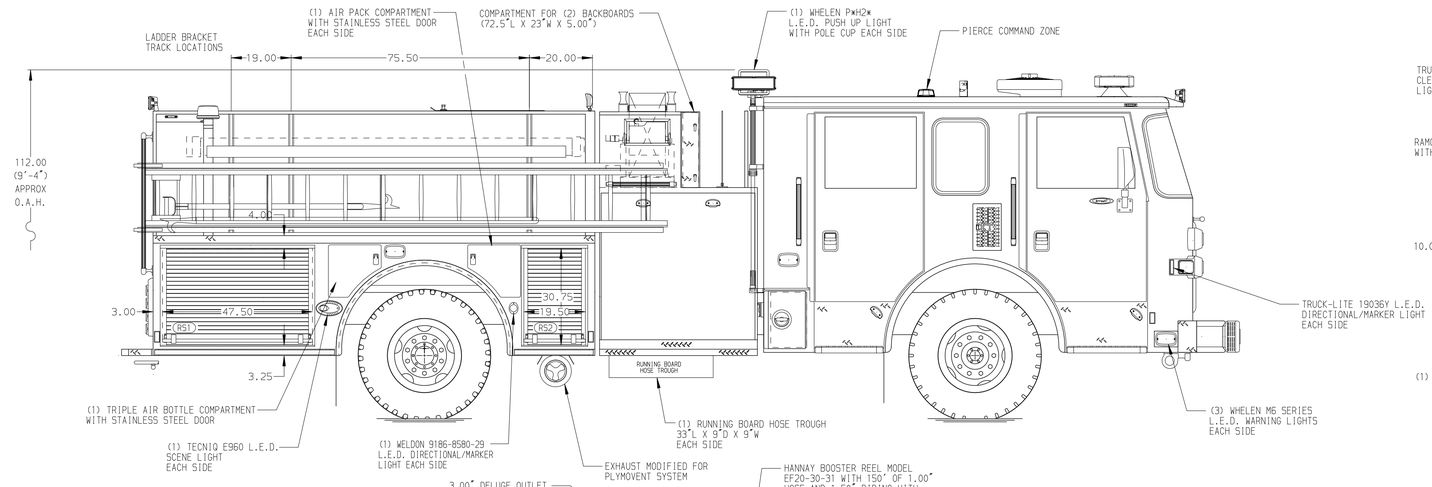

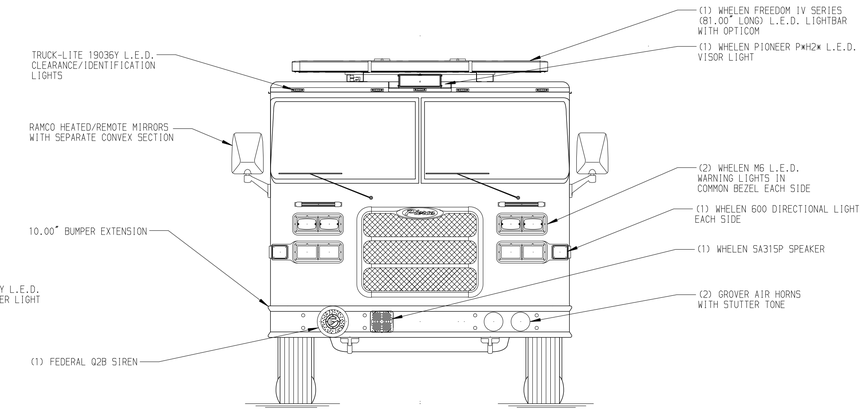

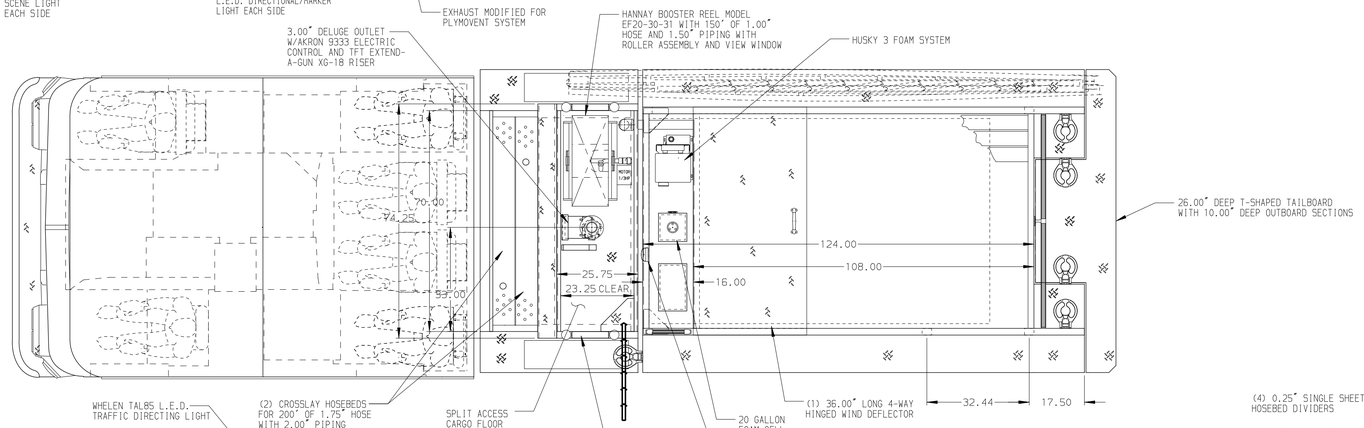

HOSEBED CAPACITIES

1. 800' OF 5.00" D.J. SYNTHETIC ANGUS HOSE
2. 500' OF 2.50" D.J. POLY HOSE
3. 500' OF 2.50" D.J. POLY HOSE
4. 200' OF 1.75" HI-COMBAT HOSE

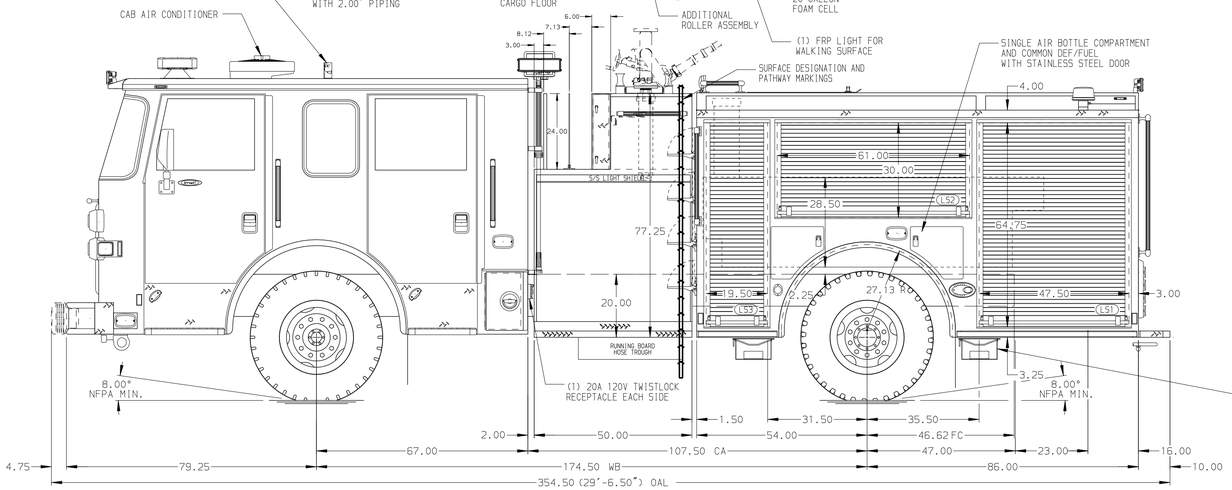

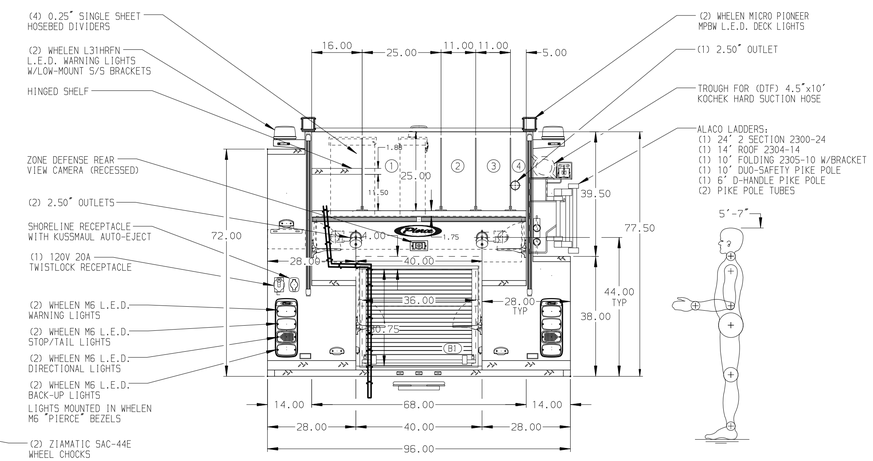

GALVANNEAL

MAXIMUM O.A.L. 354.50"

MAXIMUM O.A.H. 113.00"

NOTE

DIMENSIONS SHOWN ARE APPROXIMATE AND ARE SUBJECT TO MINOR DEVIATIONS AS MAY OCCUR OR BE NECESSARY IN CONSTRUCTION.
MINOR DETAILS NOT SHOWN.

1. AIR INLET WITH DISCONNECT COUPLING LOCATED ON DS PUMP PANEL

REV	DATE	BY	CH
V	03MAR21	JJB	BSE
B	25JAN21	SAM	BSE
V	17DEC20	SAM	BSE

CHASSIS DATA: MAKE PIERCE; MODEL ARROW XT

TITLE: 1500-D-520P, 500G WATER W/20G FOAM, 140" PUMPER BODY (2) X-LAYS, LADDER RACK, DELUGE, BOOSTER REEL, A/C

FOR: ALAMEDA COUNTY FIRE DEPARTMENT, DUBLIN, CALIFORNIA

DWG NO.: 35504AD-SH1

Pierce MANUFACTURING INC.

JOB NO.	35504
SCALE	1:24
DATE	
DRAWN BY	SAM
150CT20	
CHECKED BY	JBL
-	
SHEET SIZE	D
SHEET NO.	1 OF 2

View File Created 04-MAR-2021 09:49:48