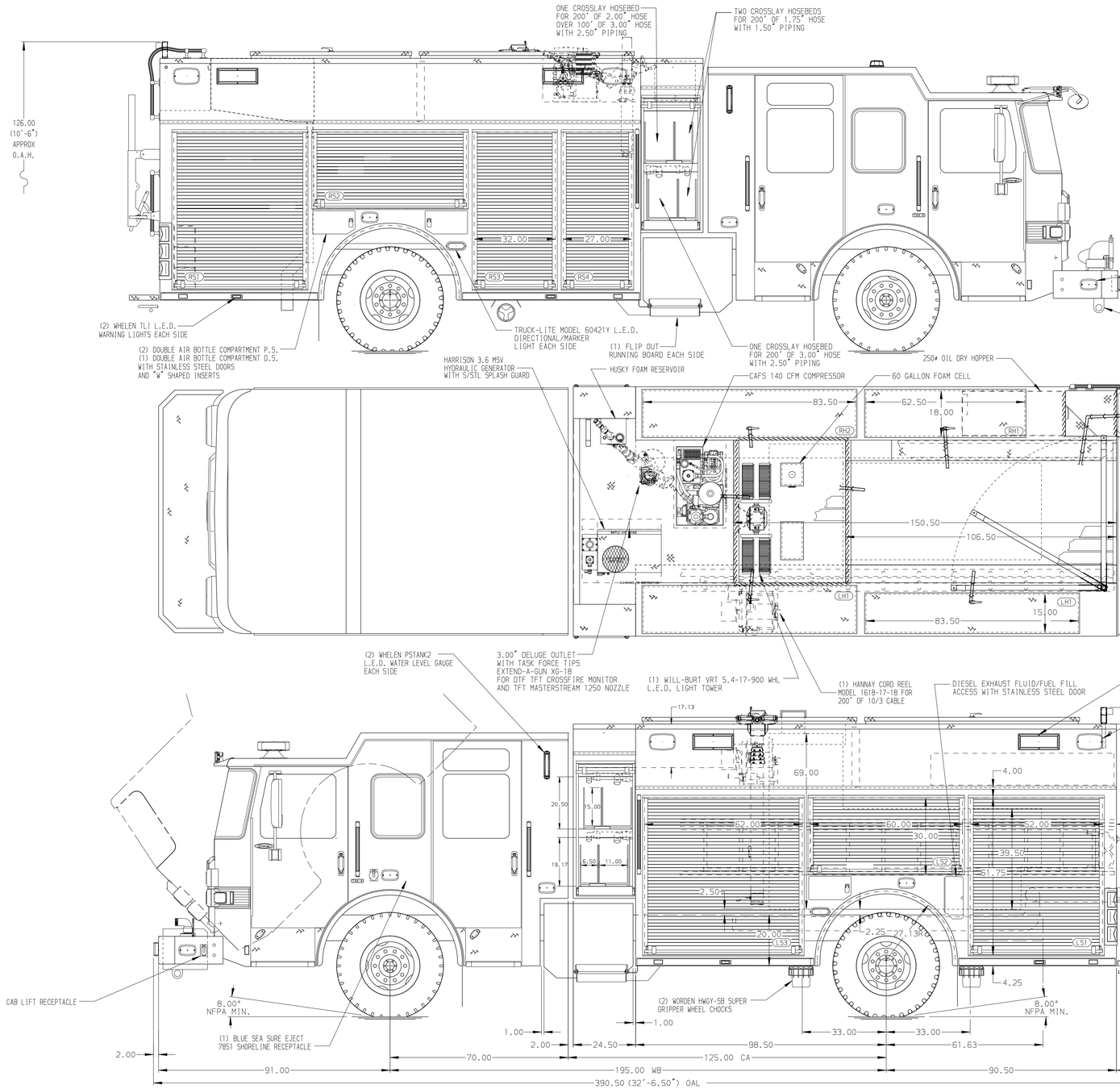

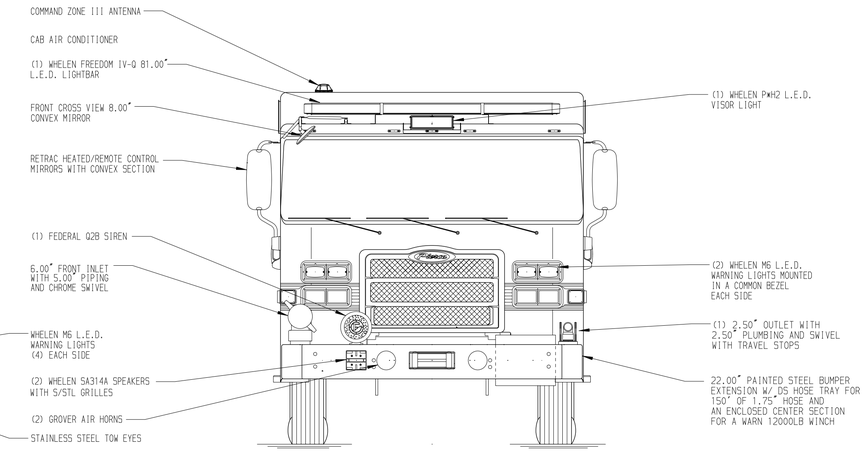

HOSEBED CAPACITIES

1. 100' OF 5.00" D.J. POLY HOSE
2. 200' OF 2.00" D.J. POLY HOSE
3. 600' OF 3.00" D.J. POLY HOSE
4. 1400' OF 4.00" D.J. POLY HOSE

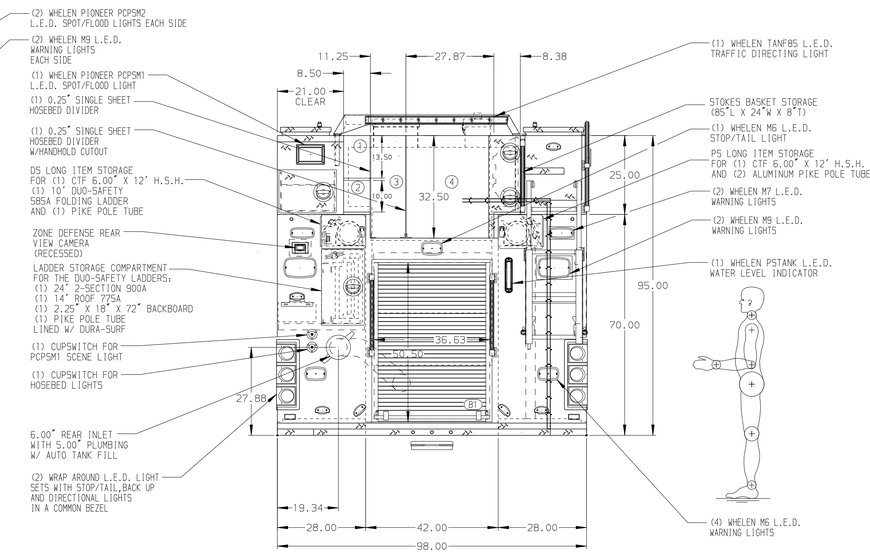

ALUMINUM BODY

MAXIMUM O.A.H. 125.00"

SIDE ROLL & FRONTAL IMPACT PROTECTION

NOTE

DIMENSIONS SHOWN ARE APPROXIMATE AND ARE SUBJECT TO MINOR DEVIATIONS AS MAY OCCUR OR BE NECESSARY IN CONSTRUCTION.
MINOR DETAILS NOT SHOWN.

1. BATTERY CHARGER LOCATED BEHIND DRIVER SEAT
2. BATTERY CHARGE INDICATOR LOCATED NEAR DRIVER'S SEAT RISER WITH BRACKET
3. TWO ADDITIONAL POLY TRAYS SHIPPED LOOSE
4. AIR INLET/OUTLET WITH DISCONNET FITTING ON THE L.S. PUMP PANEL

REV	DATE	BY	CH
1	01FEB21	JWO	JBL
2	13NOV20	JWO	JBL
3	05AUG20	JWO	JBL

CHASSIS DATA
MAKE: PIERCE
MODEL: ENFORCER

Pierce MANUFACTURING INC.

TITLE: 1500-D-690 GAL POLY W/60 GAL FOAM CELL, 189" RESCUE (4)XLAYS, DELUGE, CAFS, GENERATOR, LIGHT TOWER

FOR: ALBEMARLE COUNTY, VA
CHARLOTTESVILLE, VIRGINIA

DWG NO. 35480AD-SH1

JOB NO.	35480
SCALE 1:24	DATE
DRAWN BY JWO	29JUL20
CHECKED BY JBL	31JUL20
SHEET SIZE D	SHEET NO. 1 OF 1

View File Created 02-FEB-2021 10:52:33