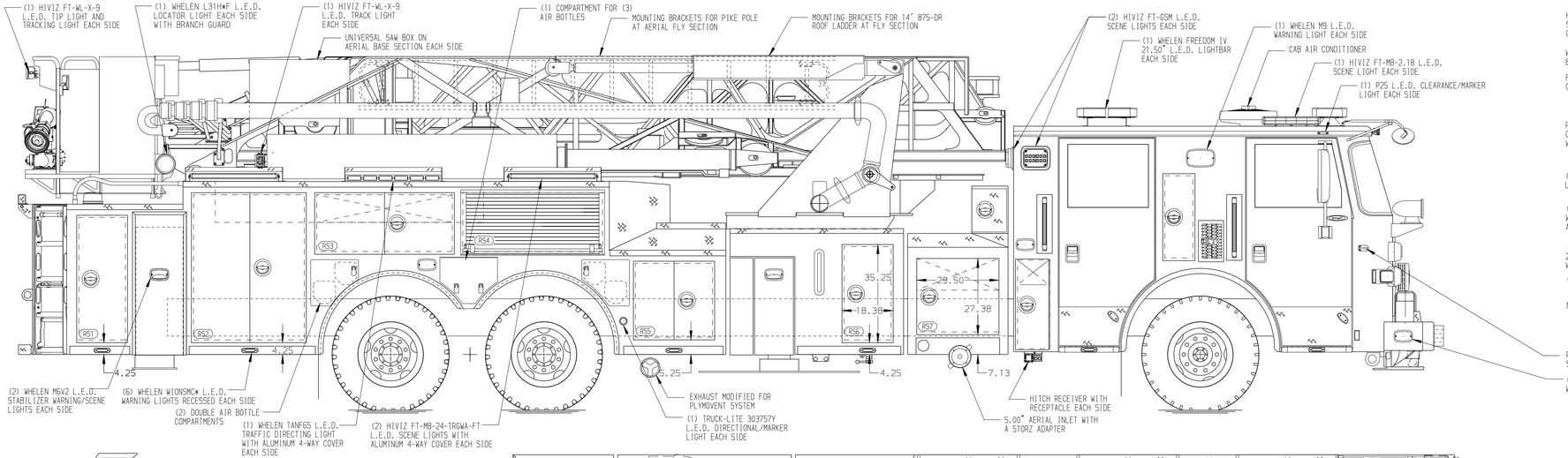

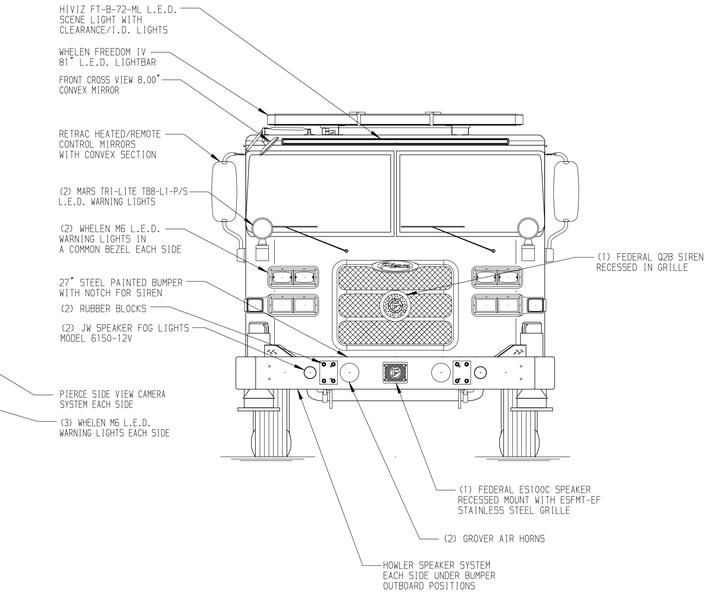

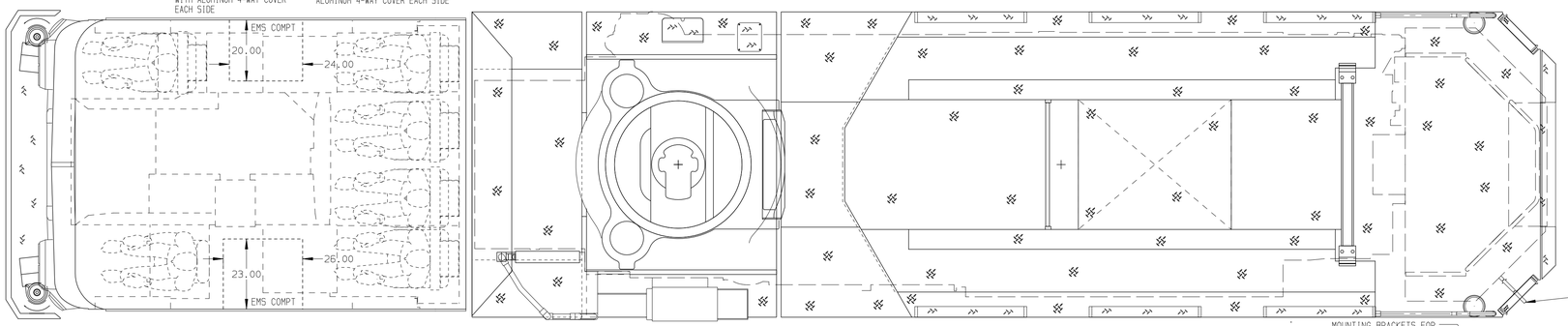

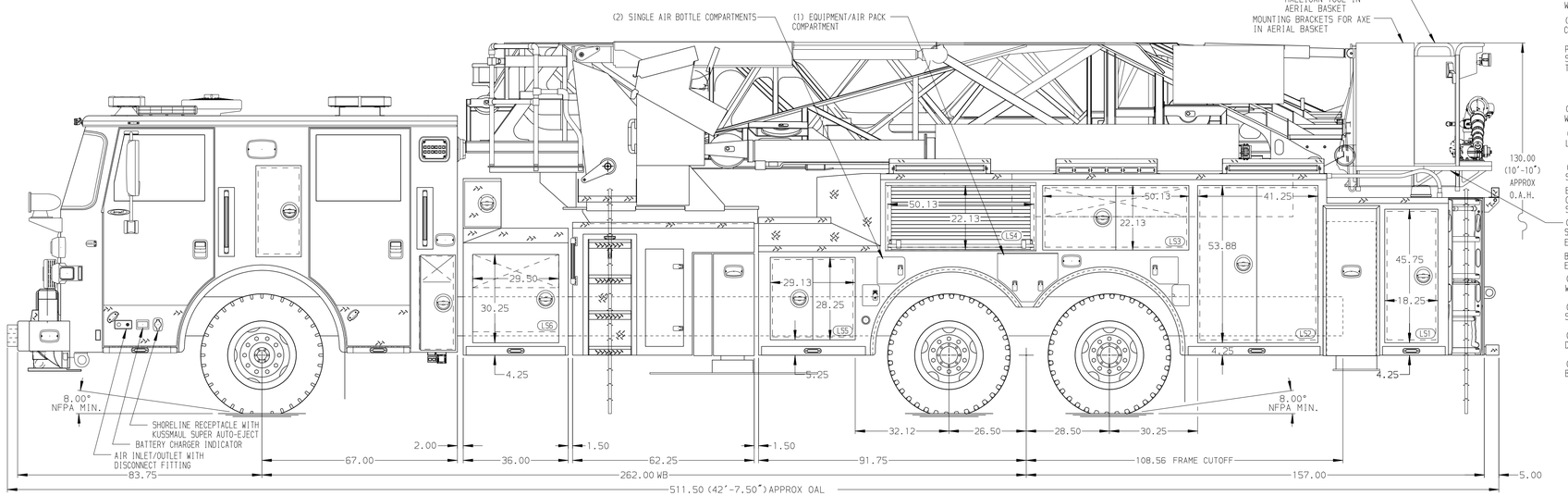

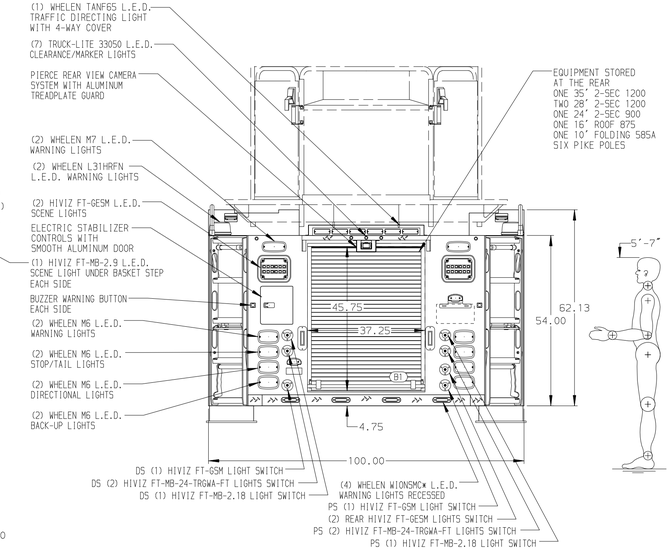

ALUMINUM BODY | MAXIMUM O.A.H. 132" | MAXIMUM O.A.L. 550" | MAXIMUM O.A.W. 77,000#

SIDE ROLL AND FRONTAL IMPACT PROTECTION | ANGLE OF APPROACH 10.0 DEGREES | ANGLE OF DEPARTURE 9.0 DEGREES

Pierce MANUFACTURING INC.

JOB NO.	35471
SCALE	1:24
DATE	280CT20
DRAWN BY	JGA
CHECKED BY	JBL
290CT20	
SHEET SIZE	D
SHEET NO.	1 OF 2

TITLE: 100' ASCENDANT AERIAL TOWER AND BODY ASSEMBLY
NO PUMP / NO TANK

FOR: BALTIMORE COUNTY
TOWSON, MD

DWG NO. 35471AD-SH1

CHASSIS DATA
MAKE: PIERCE
MODEL: ARROW XT

REV	DATE	BY	CH
3	25FEB21	JGA	JBL
2	22JAN21	JGA	JBL
1	04NOV20	JGA	JBL

NOTE

DIMENSIONS SHOWN ARE APPROXIMATE AND ARE SUBJECT TO MINOR DEVIATIONS AS MAY OCCUR OR BE NECESSARY IN CONSTRUCTION.
MINOR DETAILS NOT SHOWN.

1. THREE 120V 4-PLACE DUPLEX RECEPTACLES IN CAB PER SHOP ORDER
2. 12V POWER TO AERIAL TIP
3. 2-WAY INTERCOM SYSTEM BETWEEN AERIAL PLATFORM AND TURNTABLE
4. 3-IN-1 LYFE BRACKETS ON BASKET
5. TWO CHECKERS ROADBLOCKS AT3514-AC-Y POLY WHEEL CHOCKS WITH CTF MOUNTING BRACKETS LOCATED PER SHOP ORDER

View File Created 25-FEB-2021 15:34:22