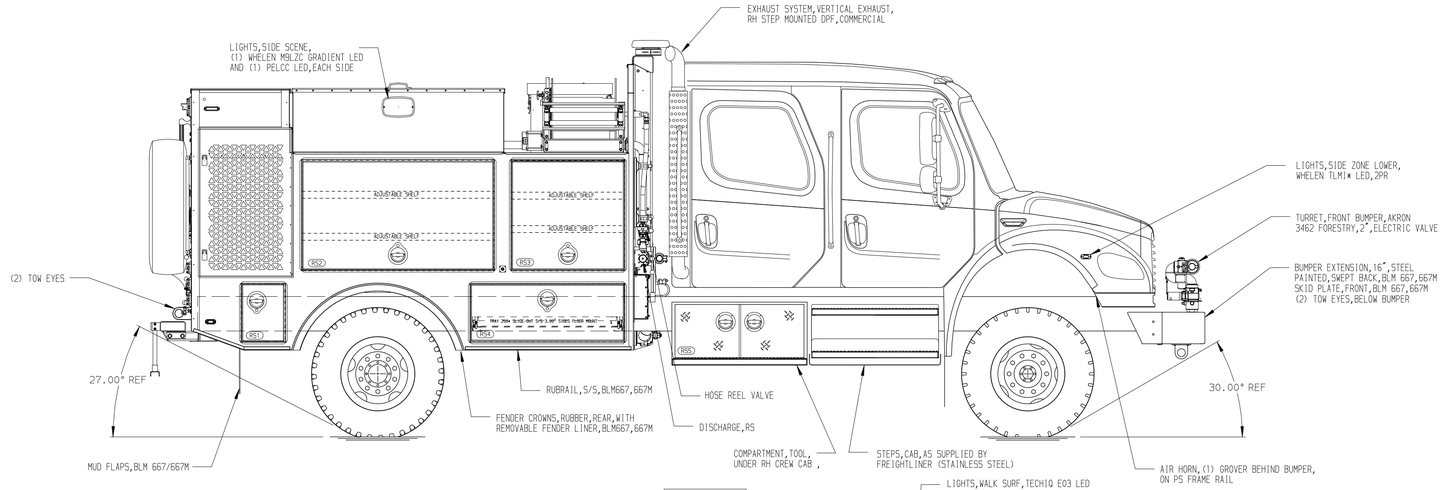

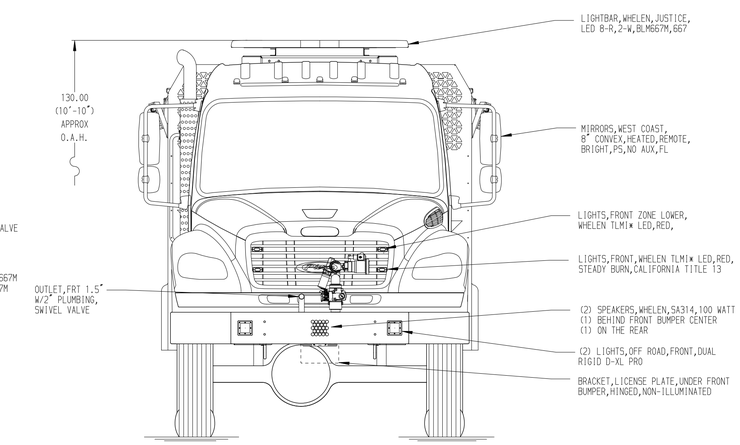

RIGHT SIDE COMPARTMENTS
CONTAIN THE FOLLOWING:

COMPARTMENT RS1 CONTAINS:
- (1) FUEL COMPT,TRAY,S/S W/1" LIP

COMPARTMENT RS2 CONTAINS:
- (2)SHELVES,ADJUSTABLE,500 LB CAPACITY, S/S,UNPAINTED,W/SECONDARY RETENTION

COMPARTMENT RS3 CONTAINS:
- (2)SHELVES,ADJUSTABLE,500 LB CAPACITY, S/S,UNPAINTED,W/SECONDARY RETENTION
- (1) FUEL COMPARTMENT TRAY,S/S WITH 1.0" LIP,BLM 667,667M

COMPARTMENT RS4 CONTAINS:
- (1) TRAY,250LB SLIDE-OUT,S/S,3" SIDES, FLOOR MOUNTED,DUAL LOCKS,BLM

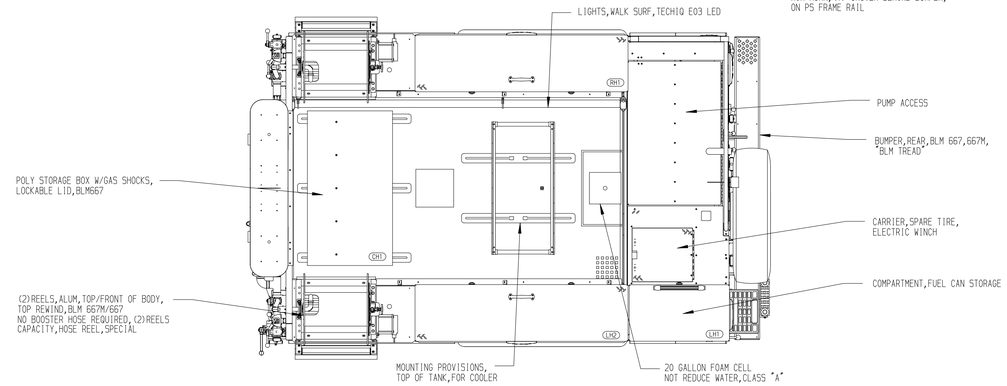

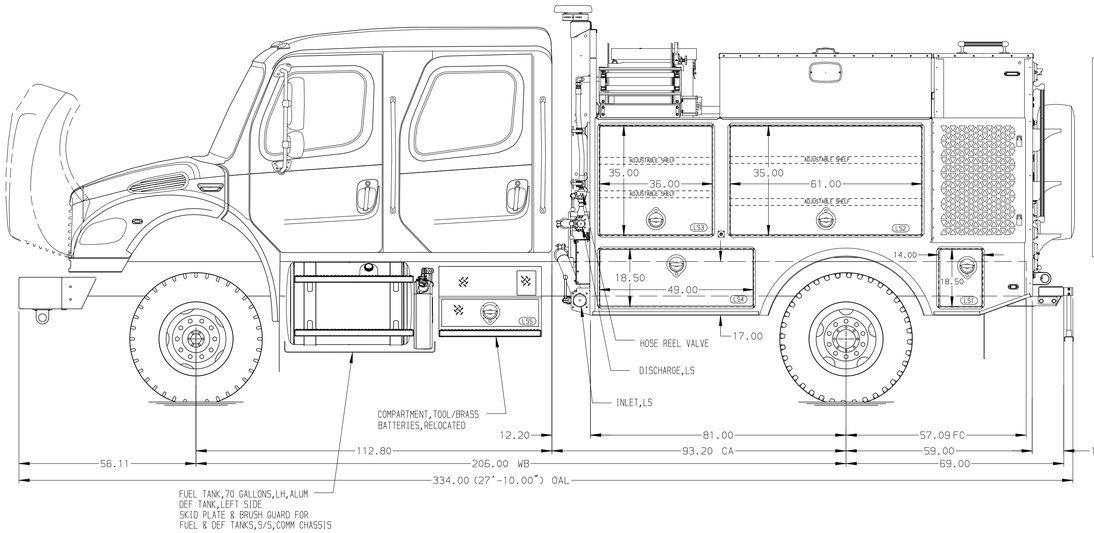

LEFT SIDE COMPARTMENTS
CONTAIN THE FOLLOWING:

COMPARTMENT LS1 CONTAINS:
- (2)WHEEL CHOCKS
- (2)SPARE TIRE CARRIER WINCH REMOTE

COMPARTMENT LS2 CONTAINS:
- (2)SHELF,ADJUSTABLE,500 LB CAPACITY, S/S,UNPAINTED,W/SECONDARY RETENTION

COMPARTMENT LS3 CONTAINS:
- (2)SHELVES,ADJUSTABLE,500 LB CAPACITY, S/S,UNPAINTED,W/SECONDARY RETENTION

COMPARTMENT LS4 CONTAINS:

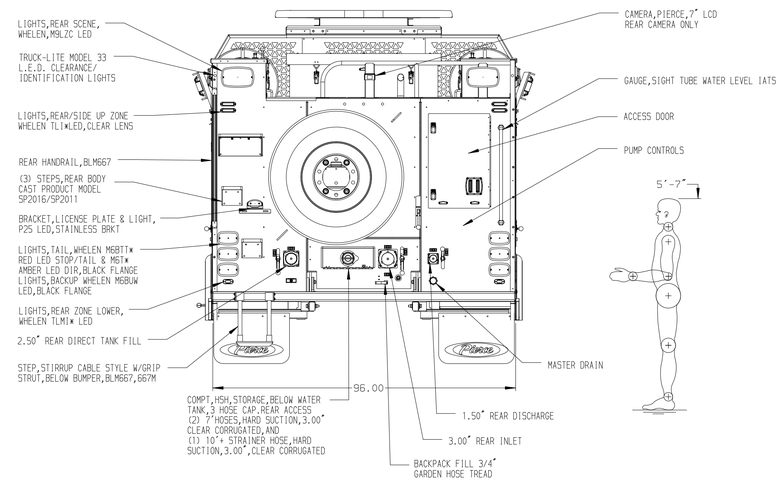

STAINLESS STEEL BODY

NOTE
DIMENSIONS SHOWN ARE APPROXIMATE AND ARE SUBJECT TO MINOR DEVIATIONS AS MAY OCCUR OR BE NECESSARY IN CONSTRUCTION.
MINOR DETAILS NOT SHOWN.

800 GALLON WATER TANK 3598594

NOTE: WINTERIZE BEFORE SHIPMENT,BLM667/667M

REV	DATE	BY	CH
V	23MAR21	JLA	DDR

CHASSIS DATA
MAKE: FL
MODEL: M2-106 4×4

Pierce MANUFACTURING INC.

TITLE: 800 GAL WATER W/20 FOAM CELL,1.5AGE W W/KUBOTA DARLEY (2) BOOSTER REELS, FOAM SYSTEM
FOR: U.S.ARMY NATIONAL GUARD VIRGINIA
DWG NO.: 35467AD

JOB NO.	35467
SCALE	1:24
DATE	
DRAWN BY	JLA
DATE	01OCT20
CHECKED BY	RWI
DATE	6OCT20
SHEET SIZE	D
SHEET NO.	1 OF 1

View File Created 25-MAR-2021 14:47:18