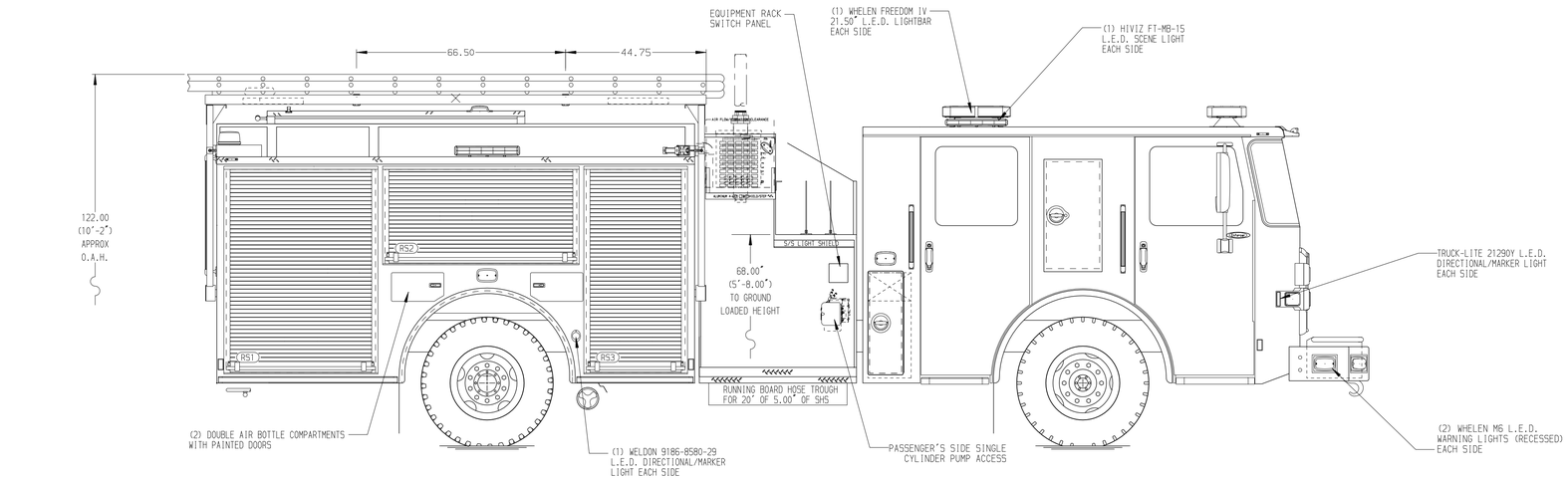

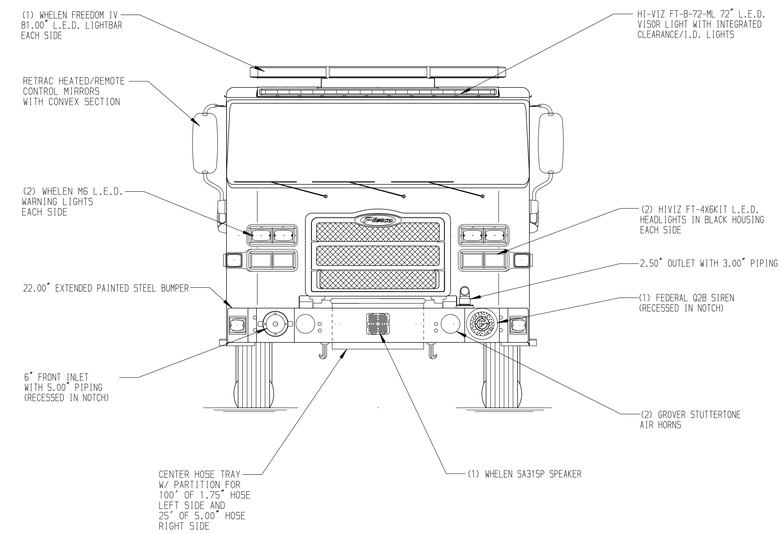

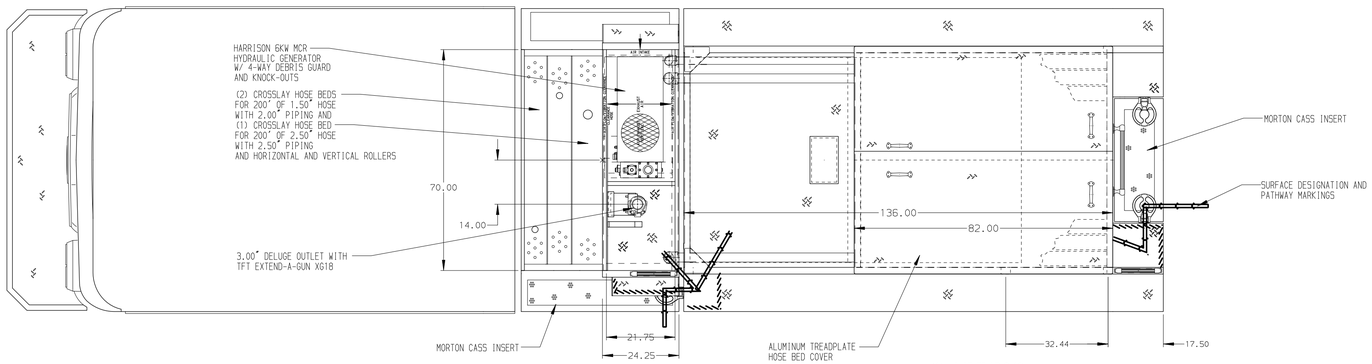

HOSEBED CAPACITIES

1. - 200' OF 3.00" DJP HOSE (SINGLE STACK)
2. - 16" CLEAR FOR HIGH RISE PACK
3. - 1000' OF 5.00" DJP HOSE (FOUR STACKS)
4. - 200' OF 3.00 DJP" HOSE (SINGLE STACK)
5. - 300' OF 1.75 DJP" HOSE (SINGLE STACK)

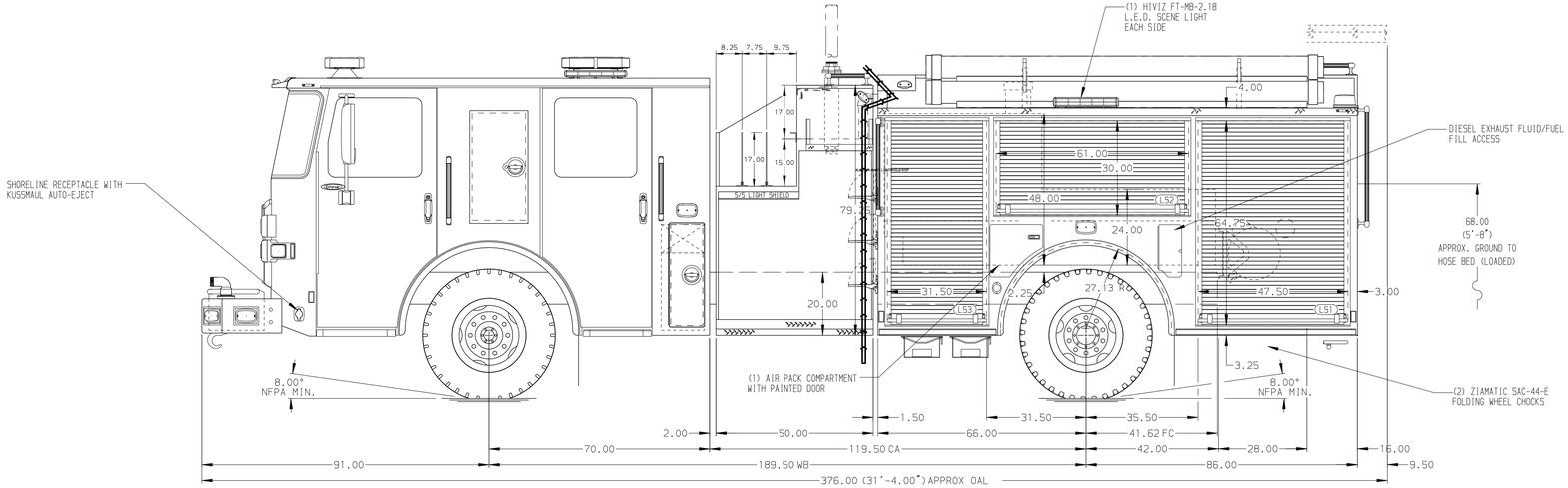

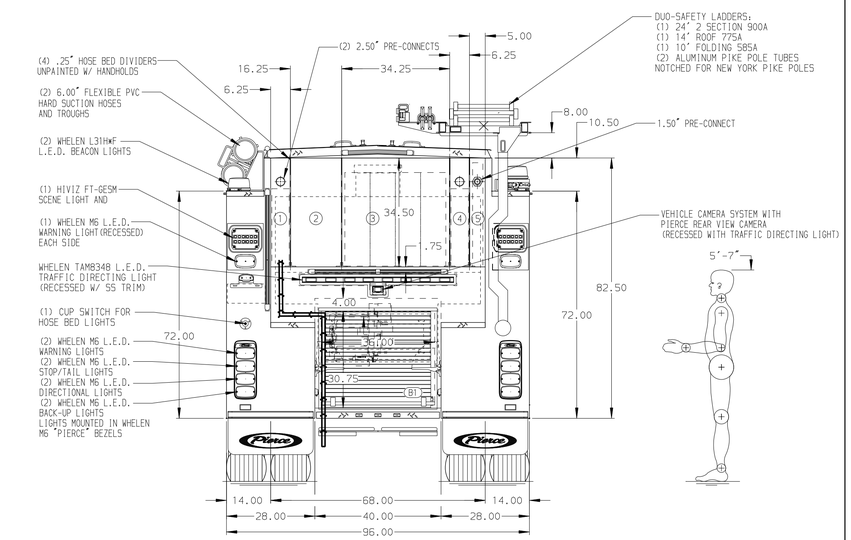

ALUMINUM BODY

SIDE ROLL AND FRONTAL IMPACT PROTECTION

NOTE

DIMENSIONS SHOWN ARE APPROXIMATE AND ARE SUBJECT TO MINOR DEVIATIONS AS MAY OCCUR OR BE NECESSARY IN CONSTRUCTION.
MINOR DETAILS NOT SHOWN.

1. AIR INLET/OUTLET WITH DISCONNECT FITTING LOCATED ON LS PUMP PANEL
2. BATTERY CHARGER LOCATED BEHIND THE DRIVER SEAT
3. BATTERY CHARGER INDICATOR LOCATED ON DRIVER'S SEAT RISER
4. L.E.D. DUAL LIGHT STRIPS LOCATED IN HOSE BED PER SHOP ORDER
5. DRIP PAN GUARD FOR ROLL-UP DOOR LOCATED ON LS1, LS2, RS1, RS2, RS3, B1
6. ONE FULL WIDTH/DEPTH ADJUSTABLE SHELF IN COMPARTMENS LS1, LS2, LS3, RS1, RS2, AND RS3
7. PAC TRAC ON THE REAR WALL OF COMPARTMENTS LS1, LS2, LS3, RS1, RS2, AND RS3
8. CIRCUIT BREAKER PANEL IN COMPARTMENT LS3
9. ONE HANNAY ELECTRIC REWIND CORD REEL MODEL E1618-17-18 W/ 200' OF 10/3 BLACK 3 WIRE CORD LOCATED IN B1
10. TWO 120V RECEPTACLES IN LS1
11. PAC TRAC ON COMPARTMENT WALLS OF LS1, LS2, LS3, RS1, RS2, AND RS3

REV	DATE	BY	CH
B	08JAN21	SAM	CWI
A	09DEC20	SAM	CWI

CHASSIS DATA
MAKE: PIERCE
MODEL: ENFORCER

Pierce MANUFACTURING INC.

TITLE: 1500-D-750P, 750G WATER, 152" BODY, FH F&R FDLER (3) CROSSLAYS, DELUGE, HYDRAULIC LADDER RACK

FOR: VAMC PERRY POINT FIRE DEPARTMENT
PERRY POINT, MARYLAND

DWG NO. 35458AD

JOB NO.	35458
SCALE 1:24	DATE
DRAWN BY SAM	18SEP20
CHECKED BY EGO	22SEP20
SHEET SIZE D	SHEET NO. 1 OF 1

View File Created 13-JAN-2021 12:20:46