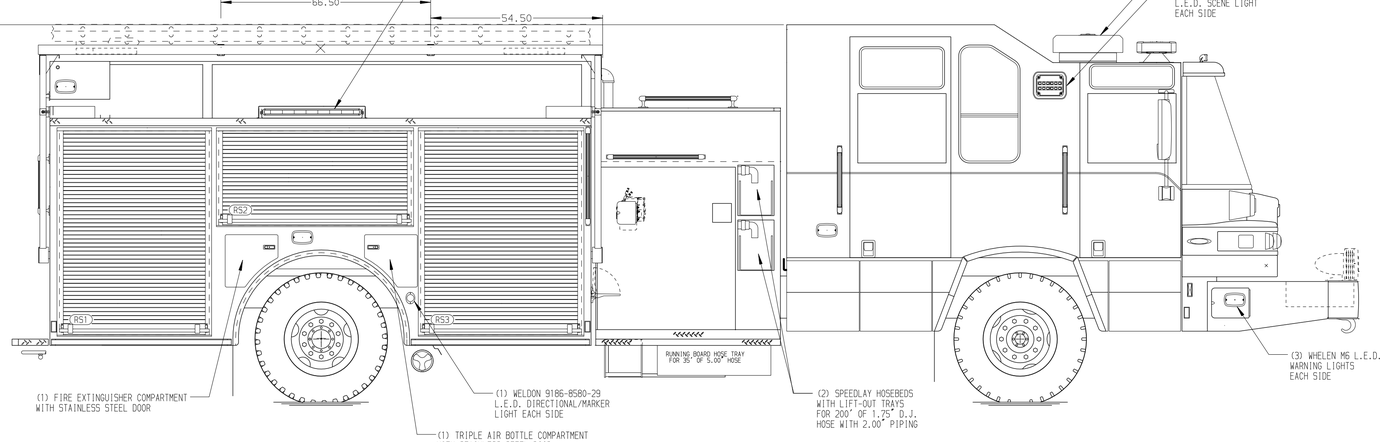

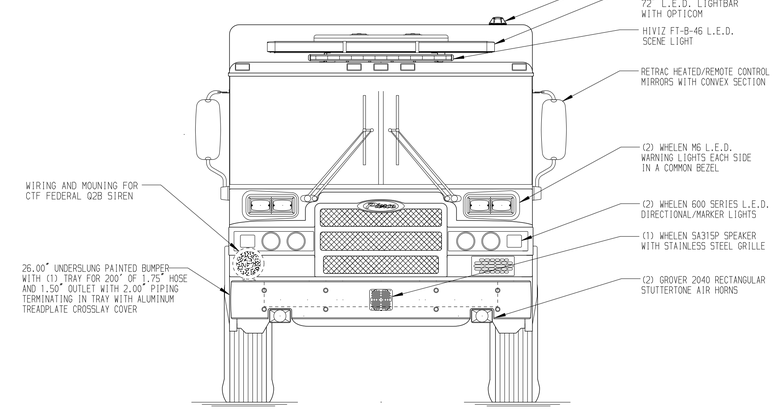

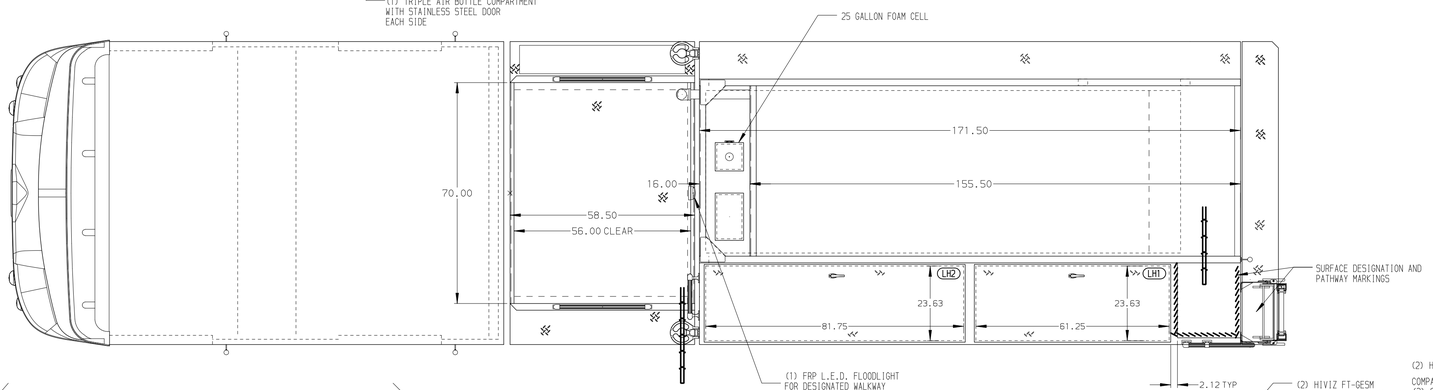

HOSEBED CAPACITIES

1 - 500' OF 5.00" D.J. POLY HOSE
2 - 500' OF 2.50" D.J. POLY HOSE
3 - 300' OF 2.50" D.J. POLY HOSE

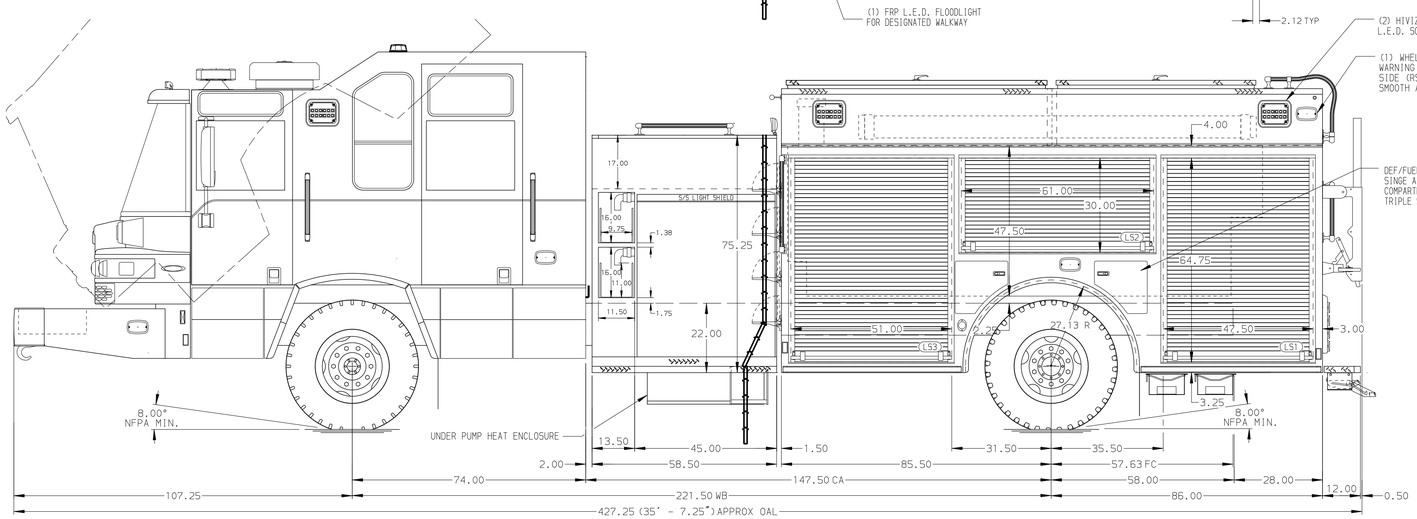

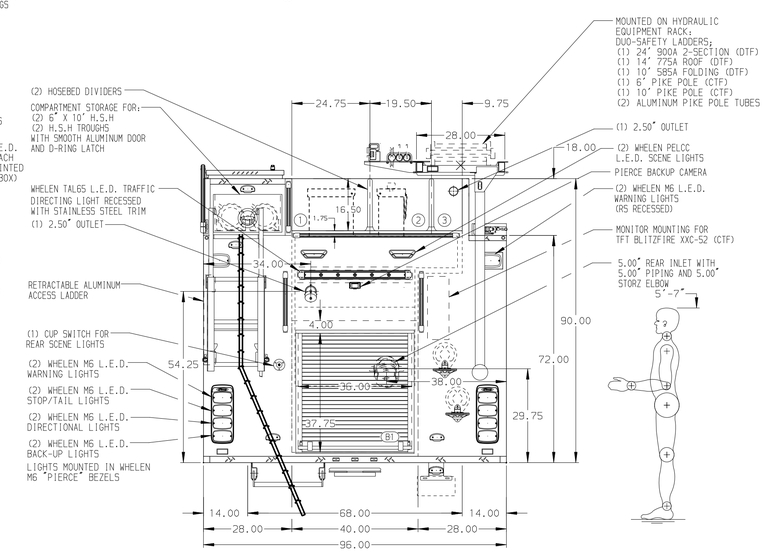

ALUMINUM BODY

NOTE

DIMENSIONS SHOWN ARE APPROXIMATE AND ARE SUBJECT TO MINOR DEVIATIONS AS MAY OCCUR OR BE NECESSARY IN CONSTRUCTION.
MINOR DETAILS NOT SHOWN.

1. BATTERY CHARGER LOCATED IN COMPARTMENT LS3
2. BATTERY CHARGER INDICATOR LOCATED ON DRIVER'S SEAT RISER
3. DRIP PAN GUARD FOR ROLL-UP DOOR LOCATED LS1,LS2,LS3,RS1,RS2,RS3 AND B1
4. ONE FULL WIDTH/DEPTH ADJUSTABLE SHELF IN COMPARTMENTS LS3 AND RS1; TWO IN LS1 AND RS3
5. ONE ADJUSTABLE TILTING SLIDE-OUT TRAY IN COMPARTMENT LS2
6. ONE FLOOR MOUNTED SLIDE-OUT TRAY IN COMPARTMENTS RS1,RS3 AND B1
7. TWO SWING-OUT TOOL BOARDS WITH PEGBOARD PATTERN IN COMPARTMENT RS2
8. SLIDE-OUT TOOL BOARD WITH PEGBOARD PATTERN IN COMPARTMENT LS1
9. ONE VERTICAL DIVIDER IN COMPARTMENT LS1
10. CTECH DRAWER ASSEMBLY IN COMPARTMENT LS3
11. FOAM PRO 1600 SINGLE AGENT FOAM SYSTEM LOCATED PER SHOP ORDER
12. 120V 6-PLACE RECEPTACLE STRIP LOCATED EMS CABINETS
13. 120V DUPLEX RECEPTACLE LOCATED IN COMPARTMENT RG1 AND RS3
14. AIR INLET WITH DISCONNECT COUPLING LOCATED ON DS SEAT RISER
15. 120V SHORELINE RECEPTACLE LOCATED ON DS SEAT RISER

REV	DATE	BY	CH
3	09JUN21	LME	CSH
2	04FEB21	LME	CSH
1	12JAN21	LME	CSH
0	08OCT20	LME	KOU

CHASSIS DATA
MAKE: PIERCE
MODEL: QUANTUM

Pierce MANUFACTURING INC.

TITLE: 1500-D-1025P, 1000 WATER, 25 FOAM, 171" FHFD PUMPER (2)SPEEDLAYS, (2)HSH'S, HYDRAULIC LADDER RACK PS

FOR: ANDOVER FIRE DEPARTMENT
ANDOVER, MINNESOTA

DWG NO.: 35405AD

JOB NO.	SCALE	DRAWN BY	CHECKED BY	SHEET SIZE	SHEET NO.
35405	1:24	LME	KOU	D	1 OF 1

DATE: 01OCT20 / 20OCT20

View File Created 09-JUN-2021 10:57:28