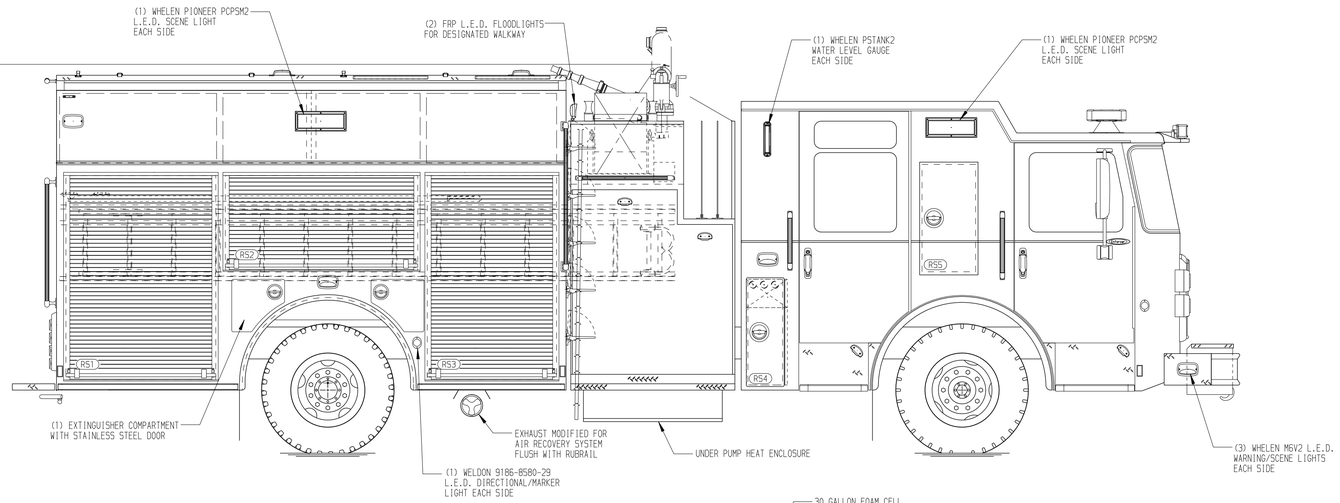

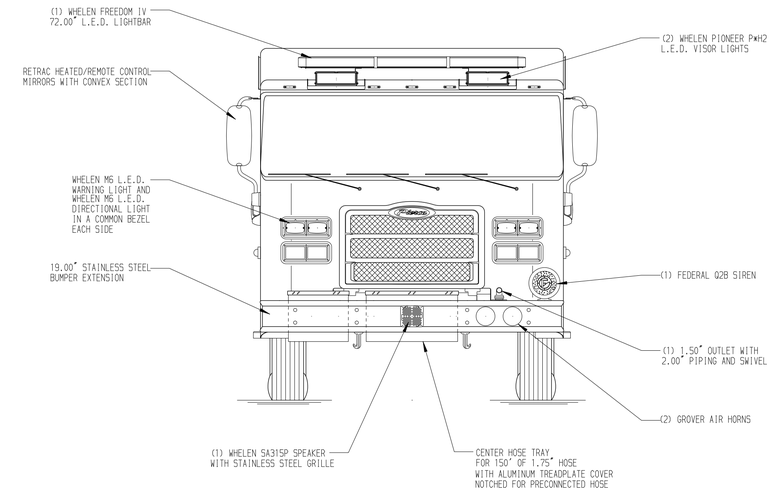

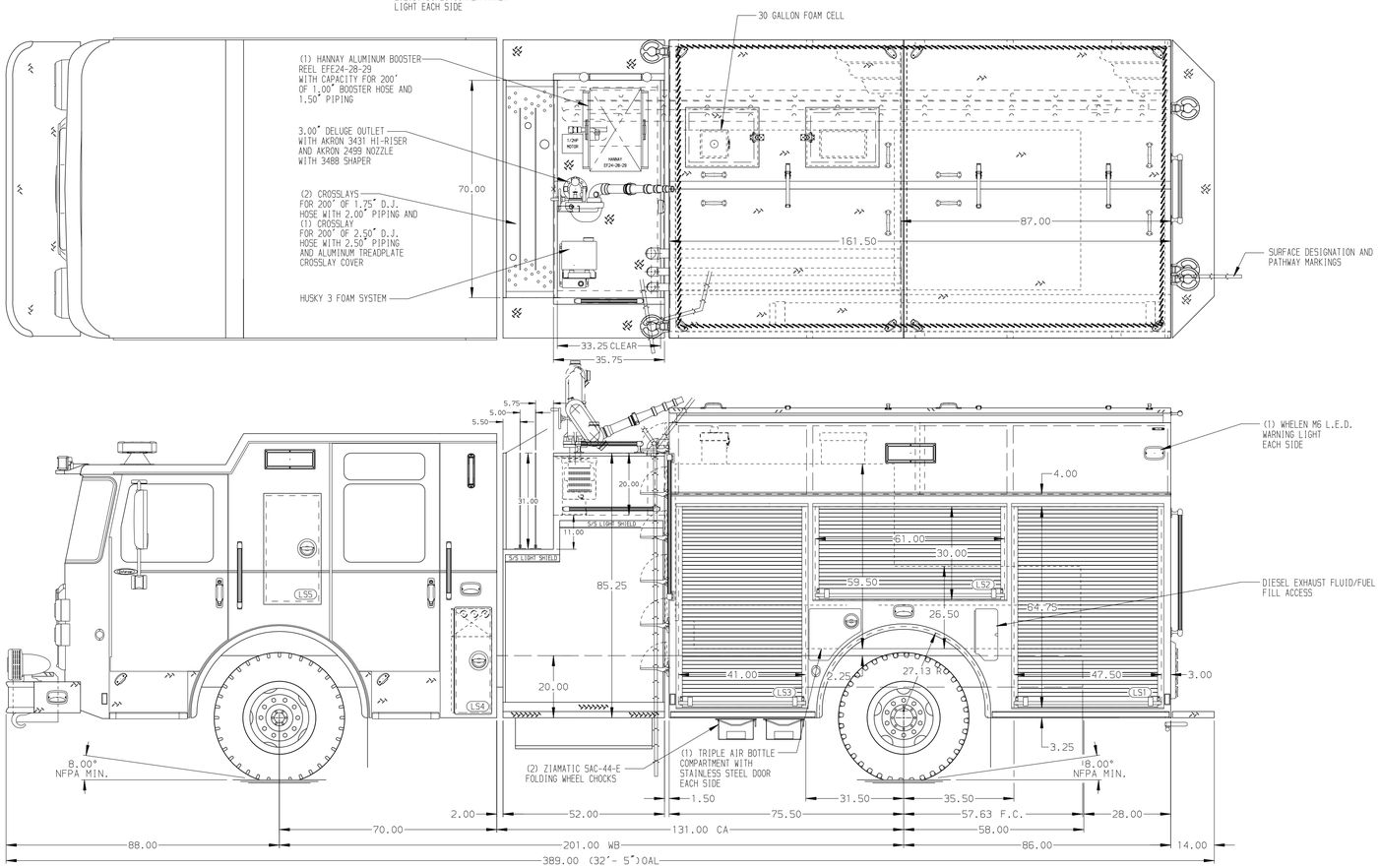

HOSEBED CAPACITIES

1. 250' OF 1.75" D.J.POLY HOSE
2. 250' OF 1.75" D.J.POLY HOSE
3. 200' OF 2.50" D.J.POLY HOSE
4. 1200' OF 4.00" D.J.POLY HOSE
5. 800' OF 4.00" D.J.POLY HOSE

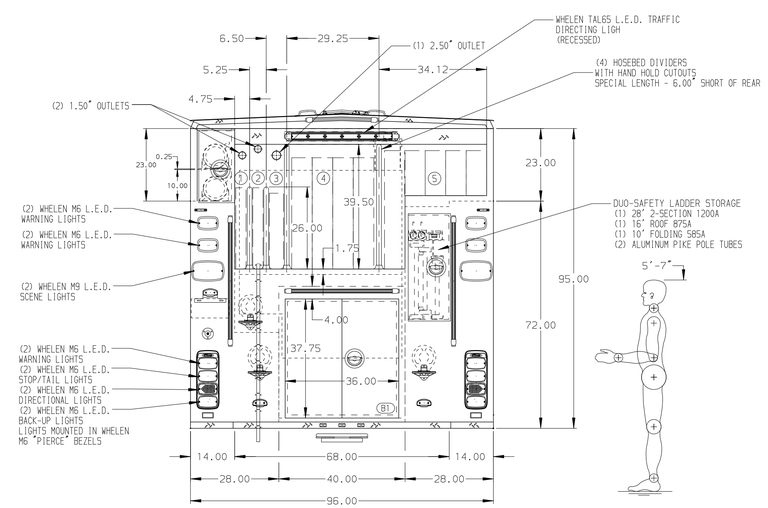

ALUMINUM BODY

SIDE ROLL AND FRONTAL IMPACT PROTECTION

NOTE

DIMENSIONS SHOWN ARE APPROXIMATE AND ARE SUBJECT TO MINOR DEVIATIONS AS MAY OCCUR OR BE NECESSARY IN CONSTRUCTION.
MINOR DETAILS NOT SHOWN.

1. BATTERY CHARGER LOCATED IN COMPARTMENT LS3
2. BATTERY CHARGER INDICATOR LOCATED ON DRIVER'S SEAT RISER
3. KUSSMAUL 20A SUPER AUTO EJECT LOCATED AT LS PUMP PANEL
4. AIR INLET W/DISCONNECT COUPLING LOCATED AT LS PUMP PANEL
5. DRIP PAN GUARD FOR ROLL-UP DOOR LOCATED IN LS1, LS2, LS3, RS1, RS2, AND RS3
6. ONE FULL WIDTH/DEPTH ADJUSTABLE SHELF IN COMPARTMENTS LS2, LS3, AND B1, TWO SHELVES IN LS1 AND LS3
7. ONE FLOOR MOUNTED SLIDE-OUT 500 LB TRAY IN COMPARTMENTS LS1, LS3, RS1, AND RS3
8. ONE FLOOR MOUNTED SLIDE-OUT 500 LB TRAY W/SIDE SLIDES IN COMPARTMENT B1
9. SWING-OUT TOOL BOARD WITH PEGBOARD PATTERN IN COMPARTMENT RS2

REV	DATE	BY	CH
1	19JAN21	SAM	KBO
0	04DEC20	SAM	KBO

CHASSIS DATA
MAKE: PIERCE
MODEL: ENFORCER

Pierce MANUFACTURING INC.

TITLE: 1750-D-1030P, 1000G WATER W/30G FOAM, 161" BODY
(3) CROSSLAYS, DELUGE, LADDER STORAGE, BOOSTER REEL

FOR: AUBURN FIRE DEPARTMENT
AUBURN, MAINE

DWG NO. 35387AD

JOB NO.	35387
SCALE	1:24
DATE	
DRAWN BY	SAM 17SEP20
CHECKED BY	CDU 17SEP20
SHEET SIZE	D
SHEET NO.	1 OF 1

View File Created 21-JAN-2021 09:28:02