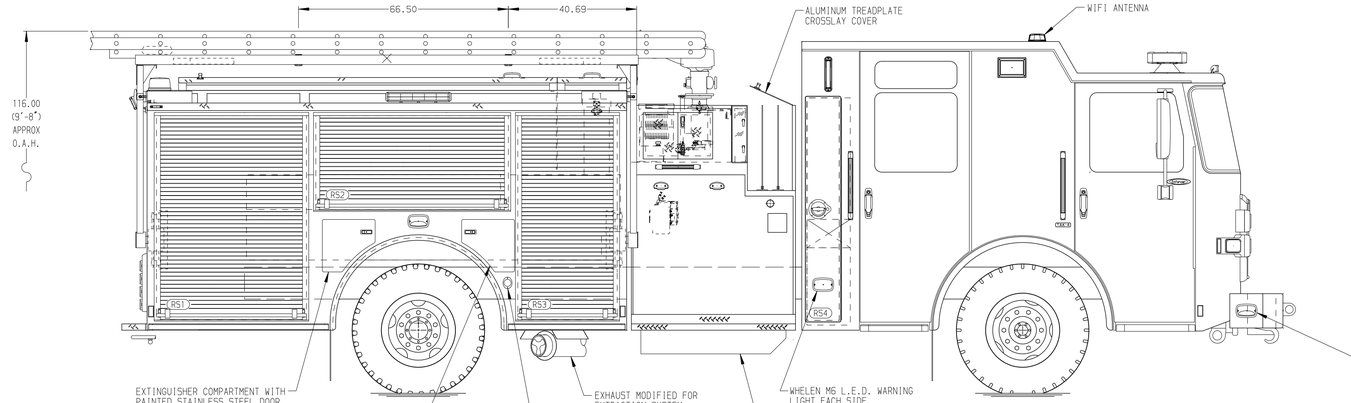

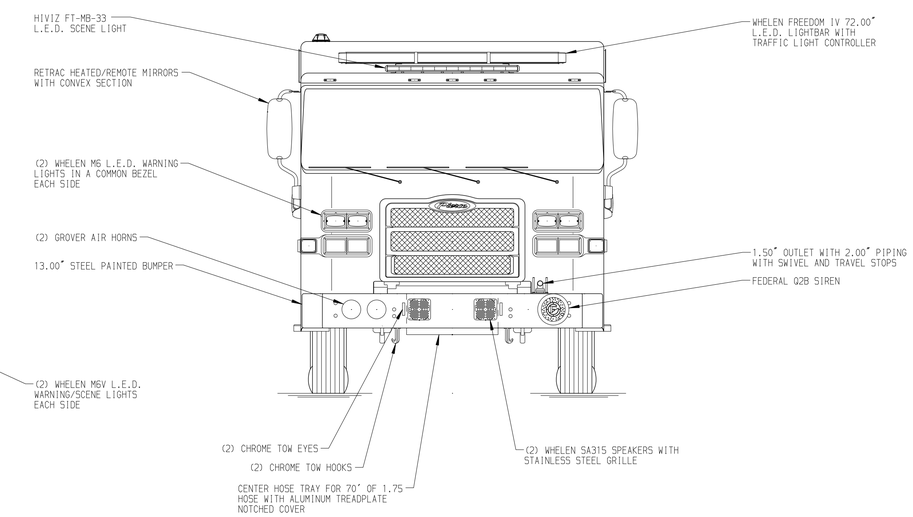

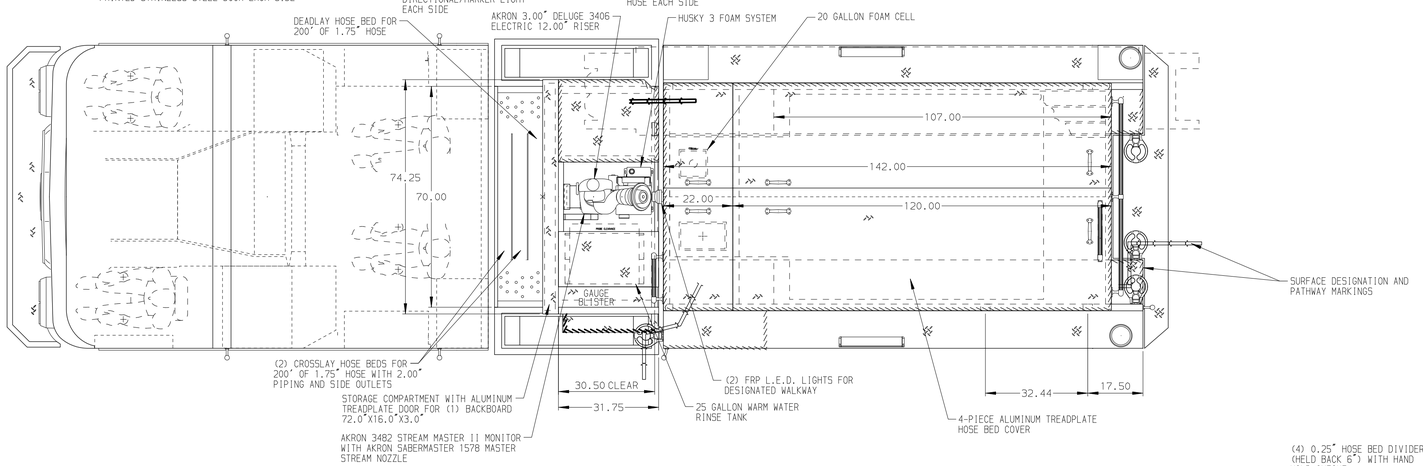

HOSEBED CAPACITIES

1. 150' OF 1.75" D.J. POLY HOSE
2. 150' OF 1.75" D.J. POLY HOSE
3. 200' OF 2.50" D.J. POLY HOSE
4. 1000' OF 5.00" D.J. POLY HOSE
5. 600' OF 2.50" D.J. POLY HOSE

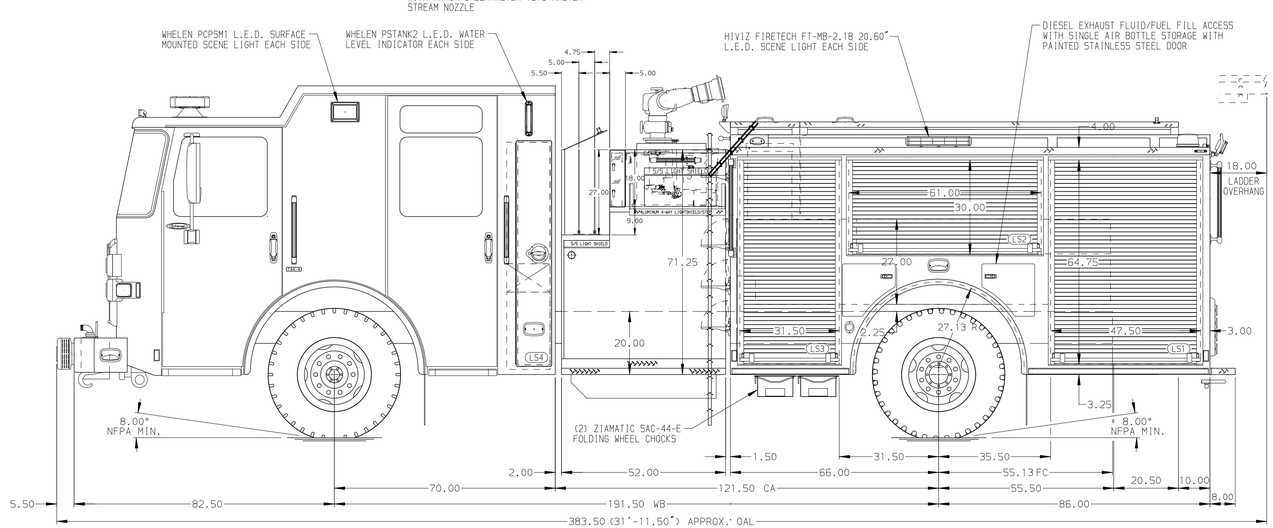

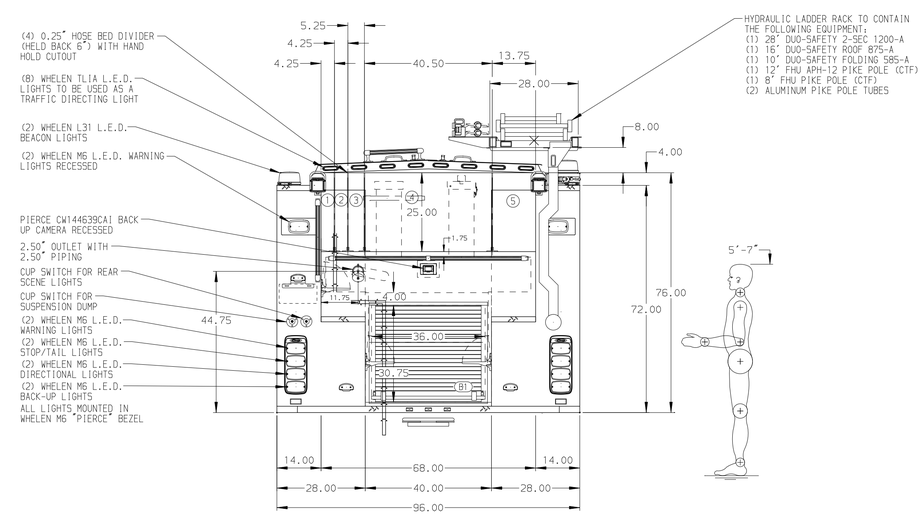

(ALUMINUM BODY) (MAXIMUM O.A.H. 118.00") (MAXIMUM O.A.L. 386.00") (SIDE ROLL AND FRONTAL IMPACT PROTECTION)

NOTE

DIMENSIONS SHOWN ARE APPROXIMATE AND ARE SUBJECT TO MINOR DEVIATIONS AS MAY OCCUR OR BE NECESSARY IN CONSTRUCTION.
MINOR DETAILS NOT SHOWN.

1. ONSPOT TIRE CHAINS PROVIDED AT THE REAR
2. BATTERY CHARGER LOCATED IN COMPARTMENT-LS3
3. BATTERY CHARGER INDICATOR LOCATED ON LEFT SIDE PUMP PANEL
4. KUSSMAUL SHORELINE RECEPTACLE WITH SUPER AUTO EJECT LOCATED ON LEFT SIDE PUMP PANEL
5. SUB-FEED CIRCUIT BREAKER PANEL IN COMPARTMENT-LS3
6. ONE FULL WIDTH/DEPTH ADJUSTABLE SHELF WITH SIDES IN COMPARTMENT-LS2,LS3,RS3; TWO IN RS1;THREE IN LS1
7. ONE FULL WIDTH/DEPTH REINFORCED ADJUSTABLE SHELF WITH SIDES IN COMPARTMENT-RS1
8. ONE ADJUSTABLE SLIDE-OUT TRAY WITH SIDES IN COMPARTMENT-LS1
9. ONE FLOOR MOUNTED SLIDE-OUT TRAY WITH SIDES IN COMPARTMENT-LS1,B1
10. ONE SWING-OUT TOOLBOARD WITH PAC-TRAC IN COMPARTMENT-RS2
11. TWO ZICO KD-UH-6-SF SCBA HOLDER BRACKETS IN COMPARTMENT-LS3,RS2
12. PARTITION BETWEEN COMPARTMENTS LS1/B1 AND RS1/B1
13. ONE HORIZONTAL EQUIPMENT MOUNTING TRACKS IN COMPARTMENT-RS3,EACH EMS COMPARTMENT
14. COMPARTMENT VENTILATION SYSTEM WITH TIMER
15. ONE 120V DUPLEX RECEPTACLE IN CAB
16. ONE 120V DUPLEX RECEPTACLE IN COMPARTMENT-LS1,LS2,LS3,RS1,RS3,B1
17. KUSSMAUL AIR COMPRESSOR IN COMPARTMENT-LS3
18. TWO ADJUSTABLE SHELVES IN COMPARTMENT-LS4,RS4
19. AIR INLET WITH DISCONNECT COUPLING RECESSED IN CAB STEP
20. ONE ADJUSTABLE FULL WIDTH/HALF DEPTH SHELF LOCATED IN COMPARTMENT-LS3,RS3

REV	DATE	BY	CH
1	10DEC20	LME	GKH
2	06NOV20	LME	GKH
3	02SEP20	BST	WKL

CHASSIS DATA
MAKE: PIERCE
MODEL: ENFORCER

Pierce MANUFACTURING INC.

TITLE: 1500-D-520P,500 GAL. WATER W/20 GAL. FOAM CELL 152" PUMPER BODY,DELUGE,HUSKY 3,HYD. LADDER RACK
FOR: EAST PIERCE FIRE AND RESCUE BONNEY LAKE, WA
DWG NO.: 35370AD

JOB NO.	35370 01-02
SCALE	1:24
DATE	
DRAWN BY	BST 25AUG20
CHECKED BY	WKL 27AUG20
SHEET SIZE	D
SHEET NO.	1 OF 1

View File Created 15-DEC-2020 12:52:46