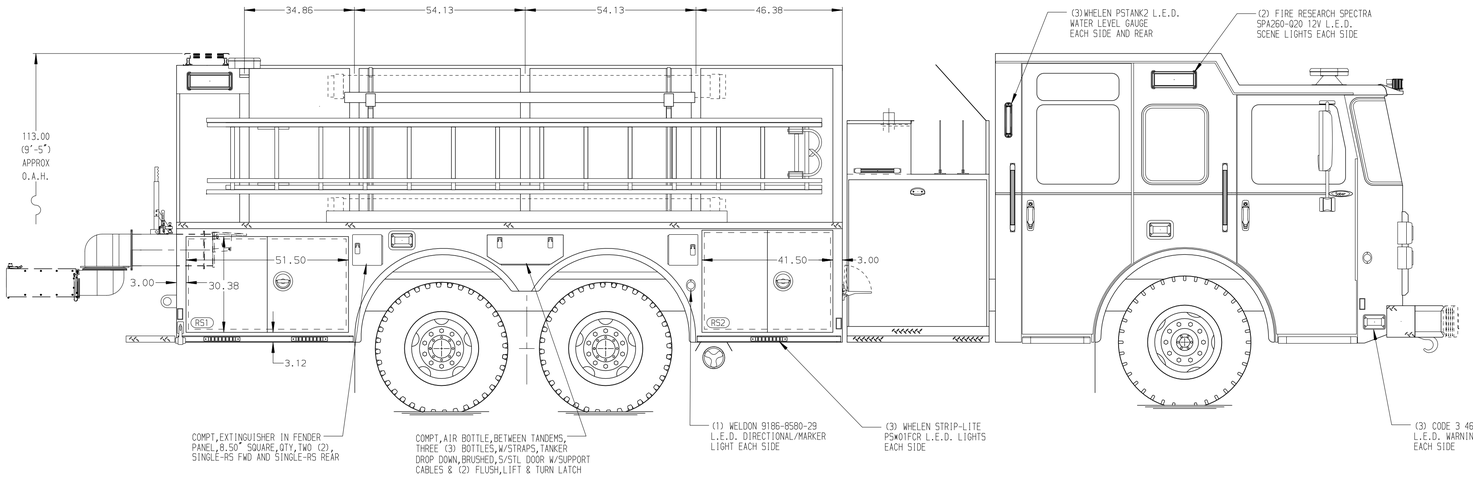


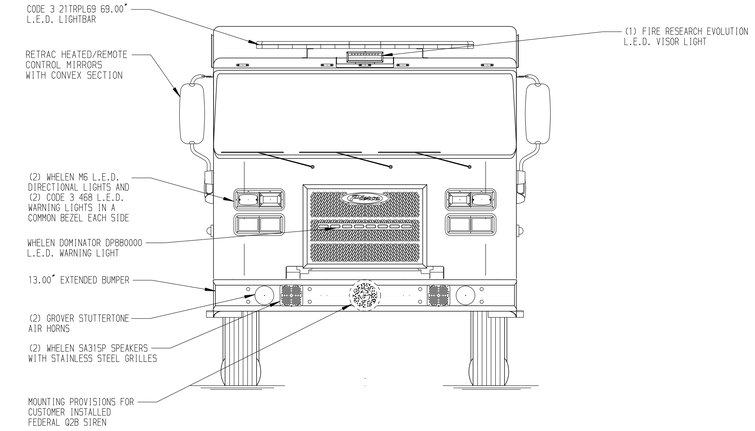


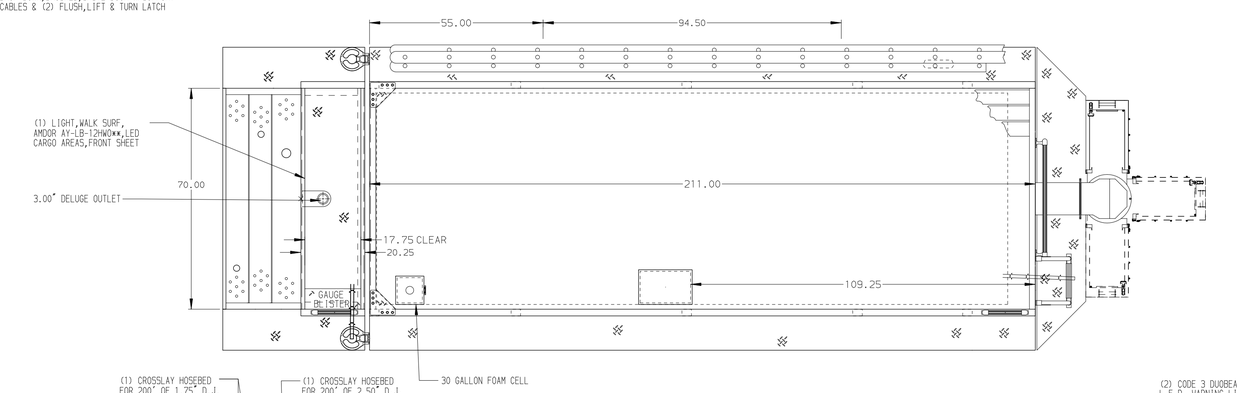


HOSEBED CAPACITIES

1. 1200' OF 5.00" D.J. POLY HOSE
2. 300' OF 3.00" D.J. POLY HOSE

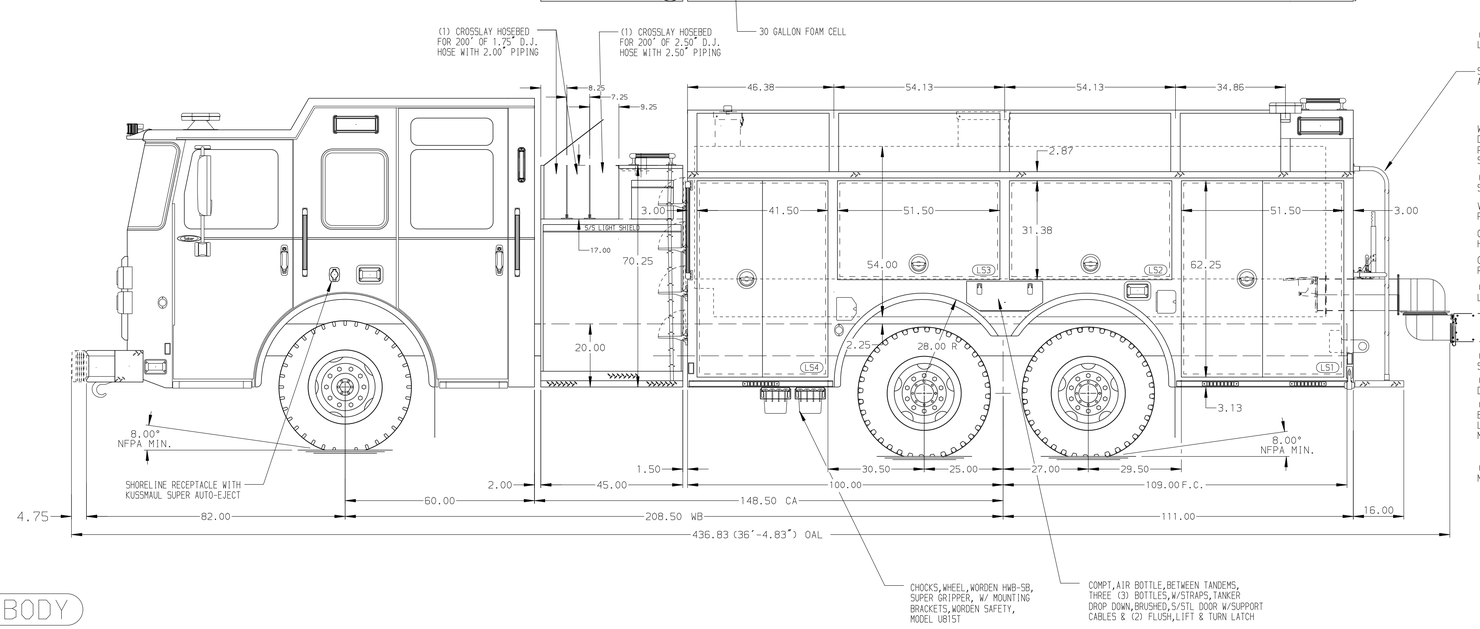


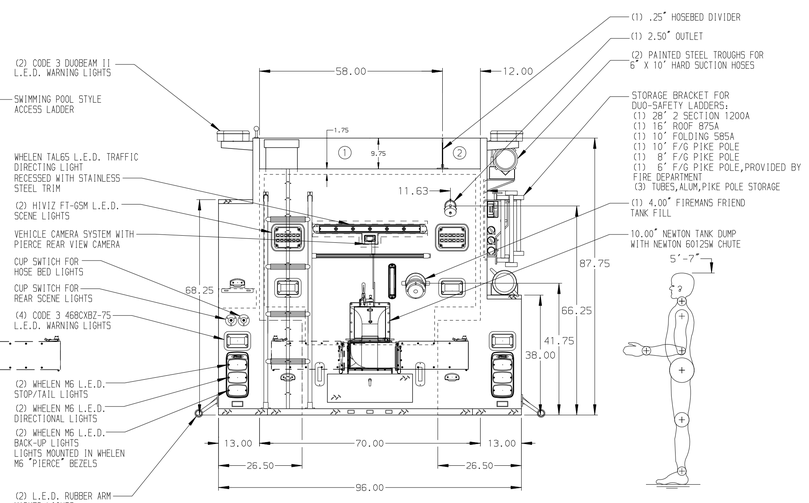


ALUMINUM BODY

NOTE

DIMENSIONS SHOWN ARE APPROXIMATE AND ARE SUBJECT TO MINOR DEVIATIONS AS MAY OCCUR OR BE NECESSARY IN CONSTRUCTION.
MINOR DETAILS NOT SHOWN.

| REV | DATE | BY | CH |
|---|---|---|---|
| 3 | 25AUG20 | RHU | AJA |
| 2 | 15JUL20 | RHU | AJA |
| 1 | 19MAY20 | JWO | NPE |

CHASSIS DATA
MAKE: PIERCE
MODEL: SABER FR

Pierce MANUFACTURING INC.

TITLE: 1500-D-2500P W/30G FOAM,211".FULL HEIGHT LS,LOW RS (3) X-LAYS,DELUGE

FOR: SKYLINE FIRE RESUE DISTRICT
MILTON, FLORIDA

DWG NO. 35351AD

| JOB NO. | 35351 |
|---|---|
| SCALE 1:24 | DATE |
| DRAWN BY JWO | 11MAY20 |
| CHECKED BY NPE | 13MAY20 |
| SHEET SIZE D | SHEET NO. 1 OF 1 |

View File Created 26-AUG-2020 12:56:51