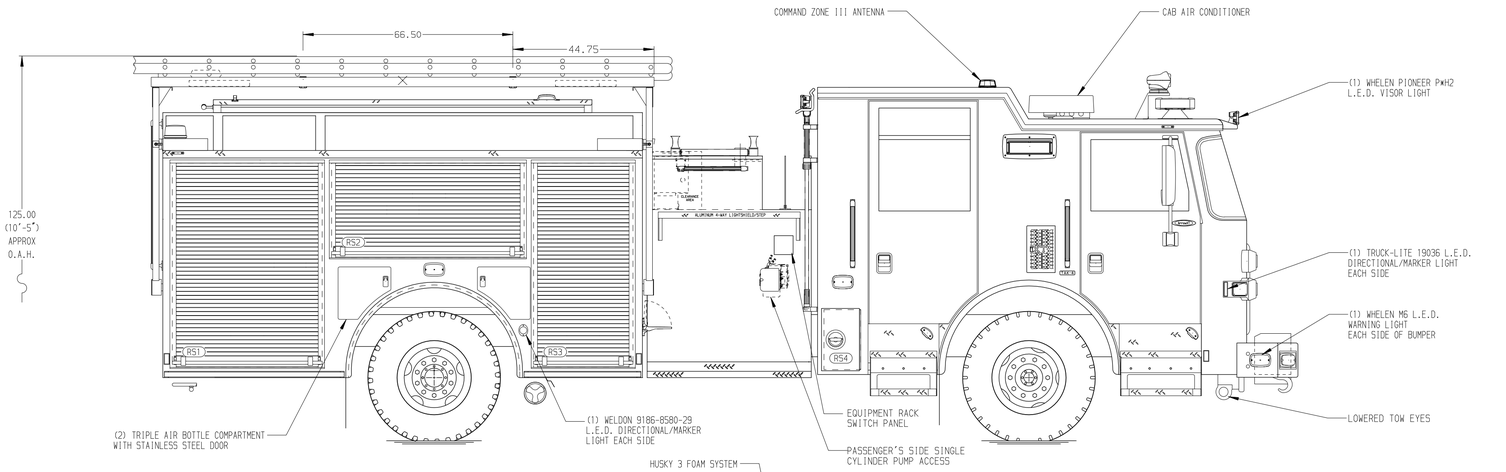

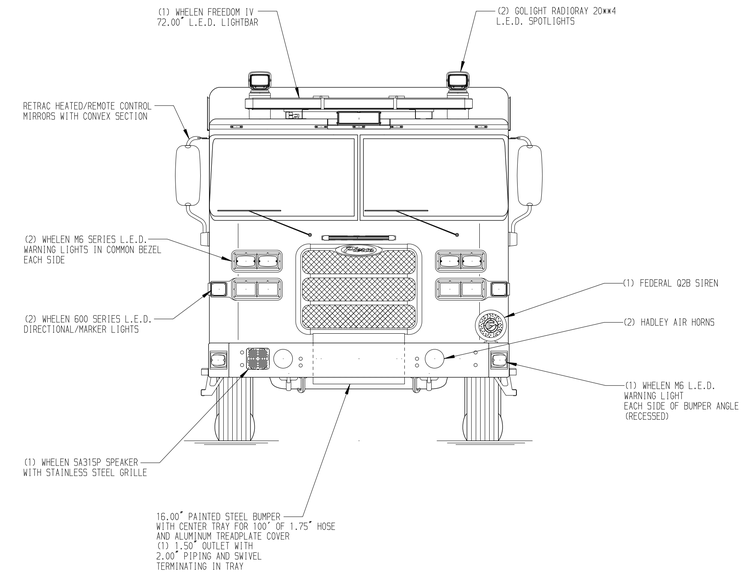

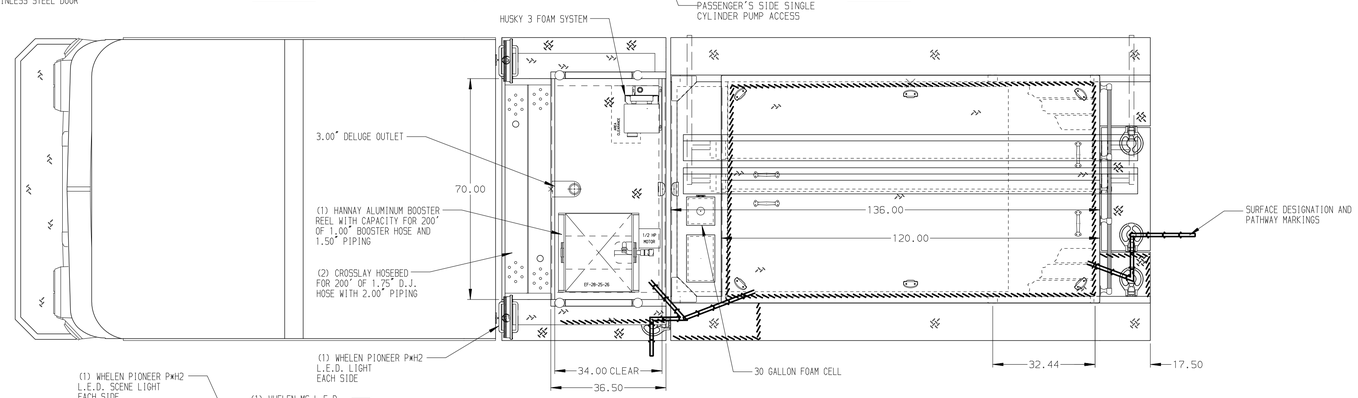

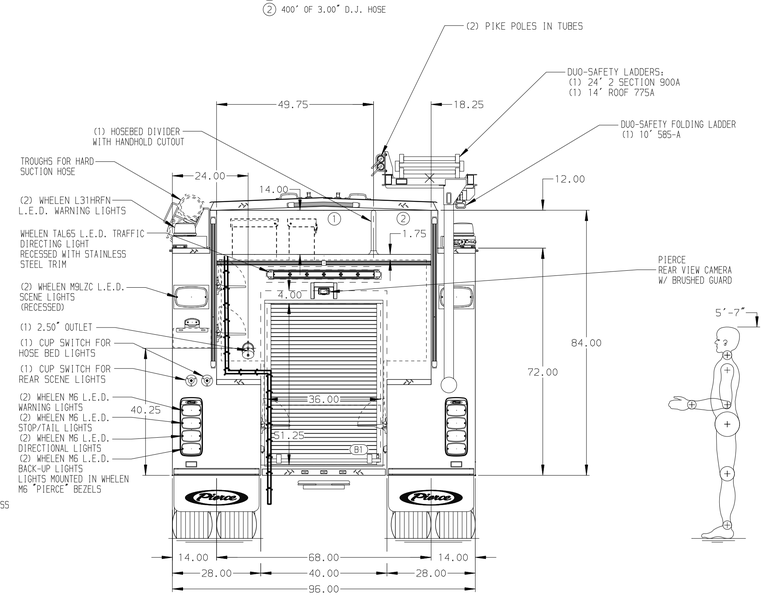

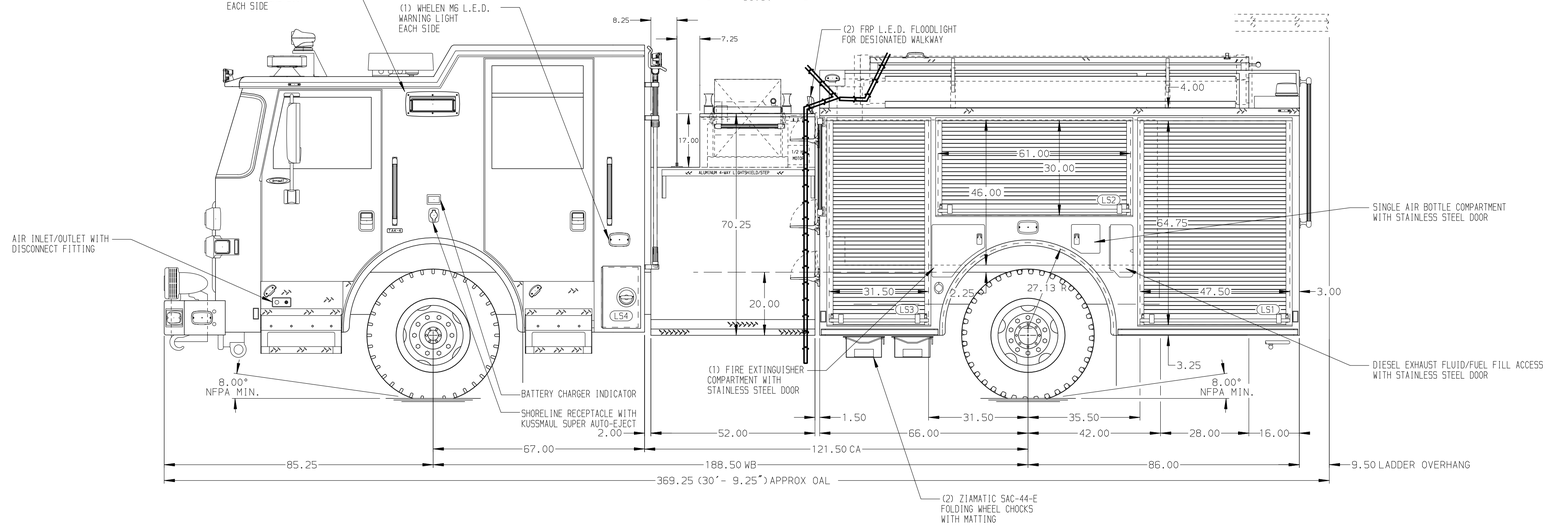

ALUMINUM BODY

SIDE ROLL AND FRONTAL IMPACT PROTECTION

NOTE

DIMENSIONS SHOWN ARE APPROXIMATE AND ARE SUBJECT TO MINOR DEVIATIONS AS MAY OCCUR OR BE NECESSARY IN CONSTRUCTION.
MINOR DETAILS NOT SHOWN.

1. BATTERY CHARGER/COMPRESSOR LOCATED IN COMPARTMENT LS3.
2. DUAL L.E.D. LIGHT STRIPS LOCATED IN HOSE BED.
3. DRIP PAN GUARD FOR ROLL-UP DOOR LOCATED IN LS1, LS2, LS3, RS1, RS2, RS3 AND B1.
4. ONE FULL WIDTH/DEPTH ADJUSTABLE SHELF IN COMPARTMENT LS1, LS3, RS1, RS3, B1.
5. TWO FLOOR MOUNTED SLIDE-OUT TRAY IN COMPARTMENTS RS1 AND B1.
6. SWING-OUT TOOL BOARD WITH PEGBOARD PATTERN IN COMPARTMENT LS2.

REV	DATE	BY	CH
E	150CT20	SAM	PPE
D	23SEP20	SAM	PPE
C	17SEP20	SAM	PPE
B	15JUL20	SAM	NPE
A	10JUL20	SAM	NPE

CHASSIS DATA
MAKE: PIERCE
MODEL: ARROW XT

Pierce MANUFACTURING INC.

TITLE: 1750-D-1030P, 1000 GAL WATER W/ 30 GAL FOAM
152" FULL HEIGHT FRONT & REAR, FDLER, (2) XLAYS

FOR: ALBANY FIRE DEPARTMENT
ALBANY, GEORGIA

DWG NO.: 35331AD

JOB NO.	35331 01-03
SCALE	1:24
DRAWN BY	SAM
DATE	01JUL20
CHECKED BY	NPE
DATE	06JUL20
SHEET SIZE	D
SHEET NO.	1 OF 1

View File Created 16-OCT-2020 09:38:28