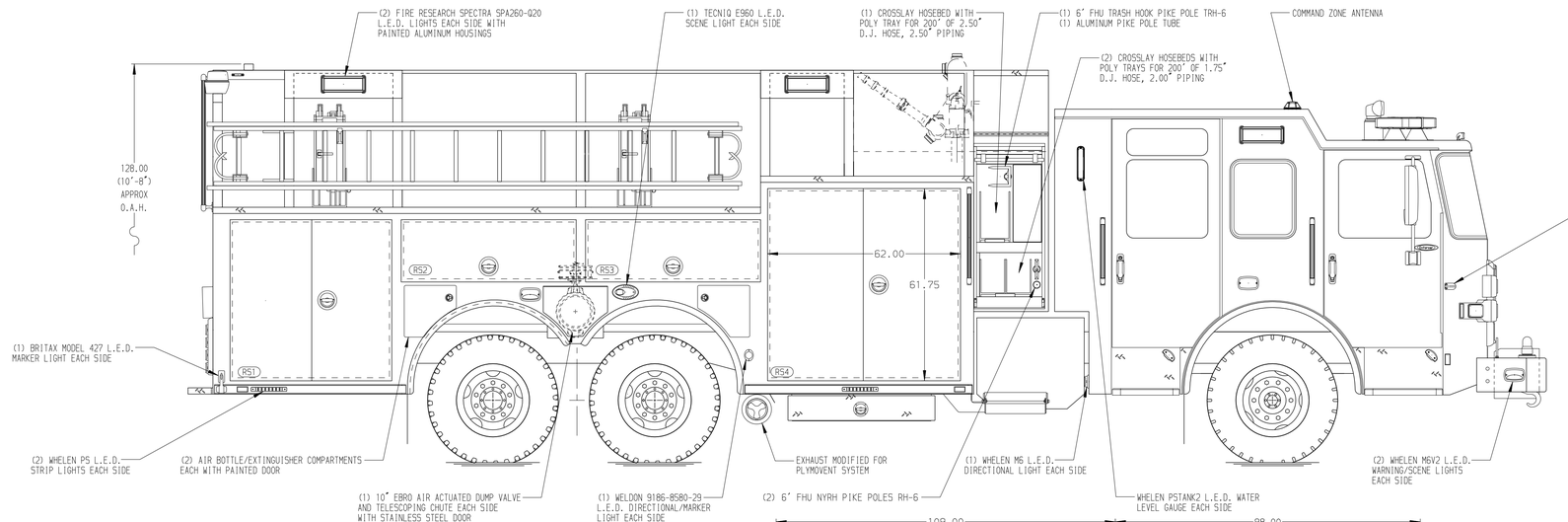

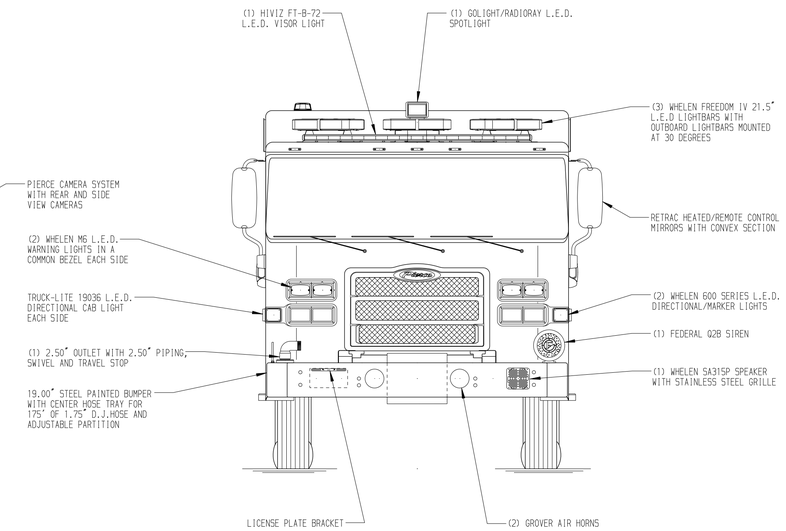

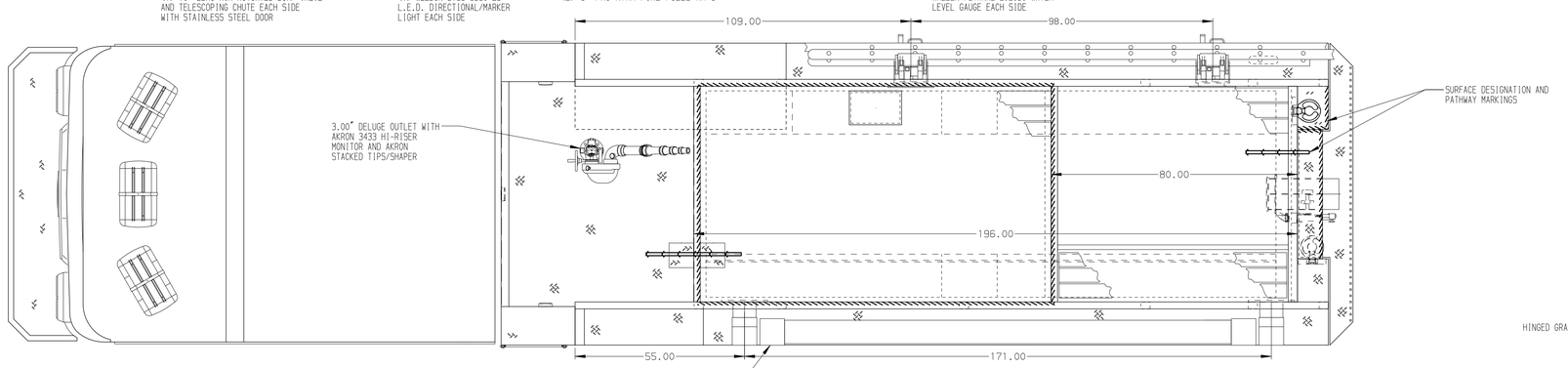

HOSEBED CAPACITIES

1. 400' OF 3.00" D.J. POLY HOSE
2. 1000' OF 4.00" LDH RUBBER HOSE
3. 200' OF 3.00" D.J. POLY HOSE

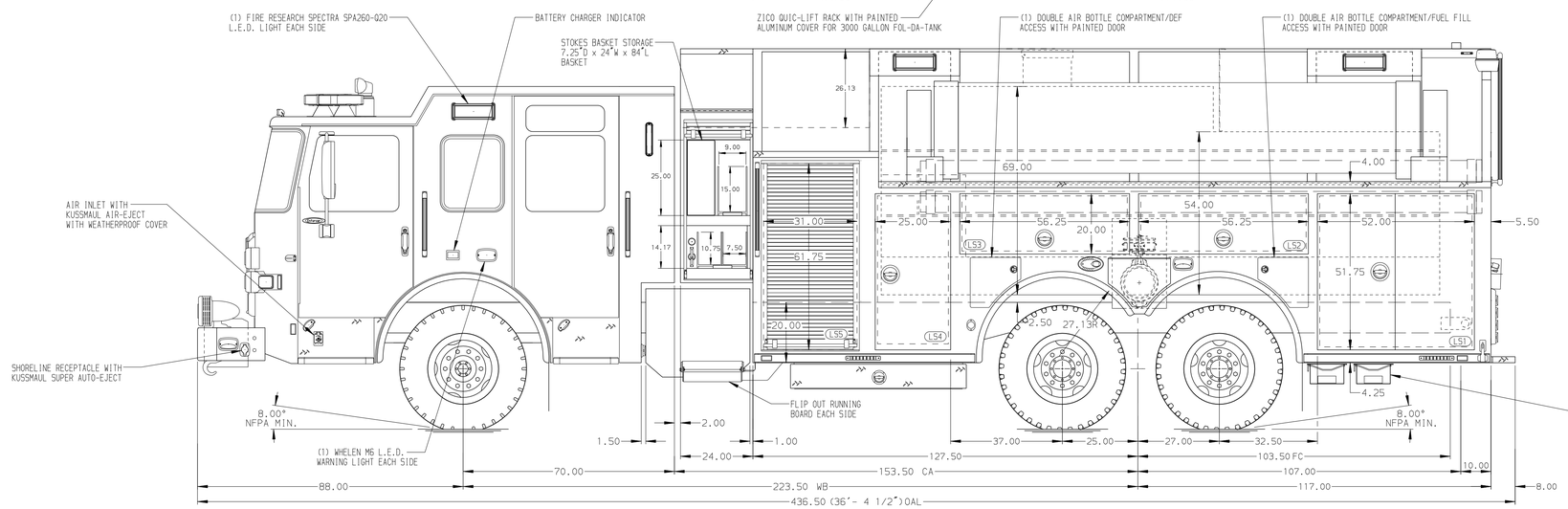

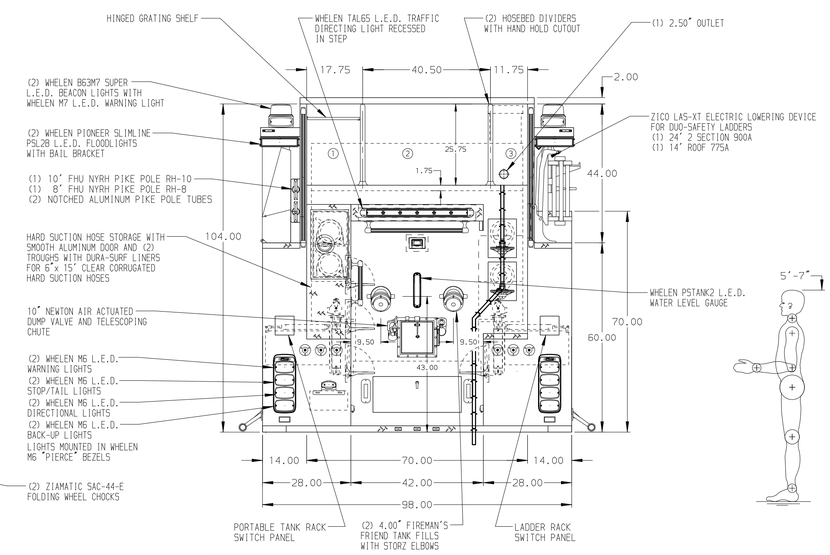

ALUMINUM BODY | MAXIMUM O.A.H. 132.00" | MAXIMUM O.A.L. 440.25" | SIDE ROLL AND FRONTAL IMPACT PROTECTION

NOTE

DIMENSIONS SHOWN ARE APPROXIMATE AND ARE SUBJECT TO MINOR DEVIATIONS AS MAY OCCUR OR BE NECESSARY IN CONSTRUCTION.
MINOR DETAILS NOT SHOWN.

1. KUSSMAUL BATTERY CHARGER AND BATTERY SAVER IN COMPARTMENT LS4
2. L.E.D. DUAL LIGHT STRIPS LOCATED IN HOSE BED
3. THREE ADDITIONAL CROSSLAY POLY TRAYS SHIPPED LOOSE
4. REVERSED HINGED DOOR ON COMPARTMENT LS4

REV	DATE	BY	CH
7	17FEB21	JRO	AZA
6	01FEB21	JRO	AZA
5	29OCT20	JRO	AZA
4	14AUG20	AMI	AZA

CHASSIS DATA
MAKE: PIERCE
MODEL: ENFORCER

Pierce MANUFACTURING INC.

TITLE: 1500-2500 WATER, 244" PUC TANKER, CROSSLAYS, DELUGE ZICO LADDER RACK, ZICO TANK RACK

FOR: WINSLOW TOWNSHIP FIRE DISTRICT #1 SICKLERVILLE, NEW JERSEY

DWG NO.: 35270AD-SH1

JOB NO.	35270
SCALE	1:24
DATE	
DRAWN BY	JRO
DATE	03AUG20
CHECKED BY	AZA
DATE	6AUG20
SHEET SIZE	D
SHEET NO.	1 OF 2

View File Created 17-FEB-2021 13:49:13