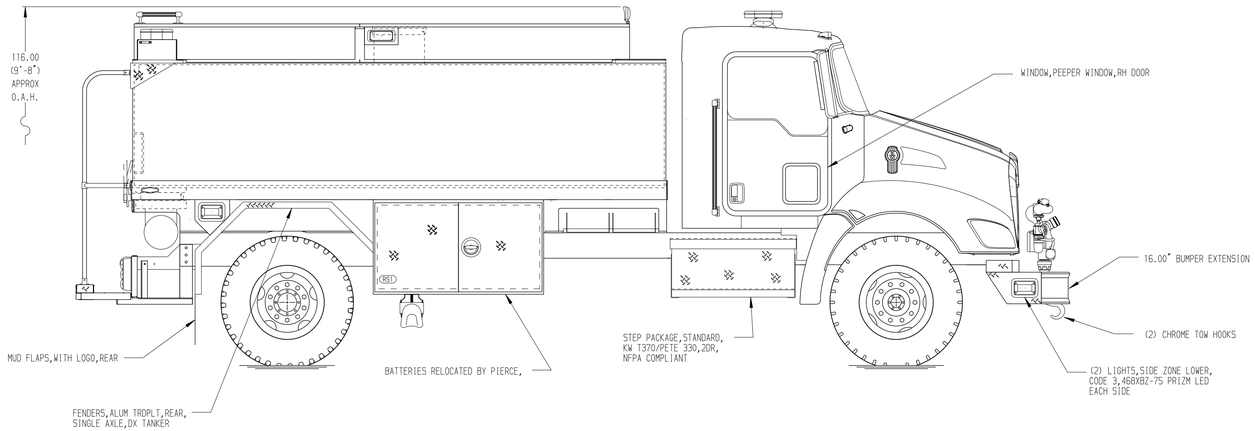

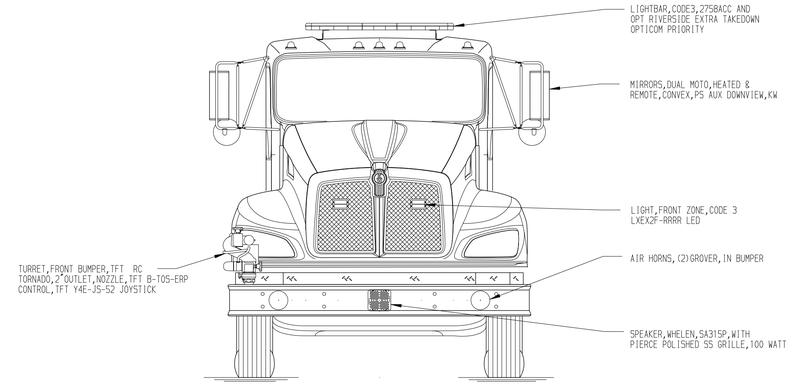

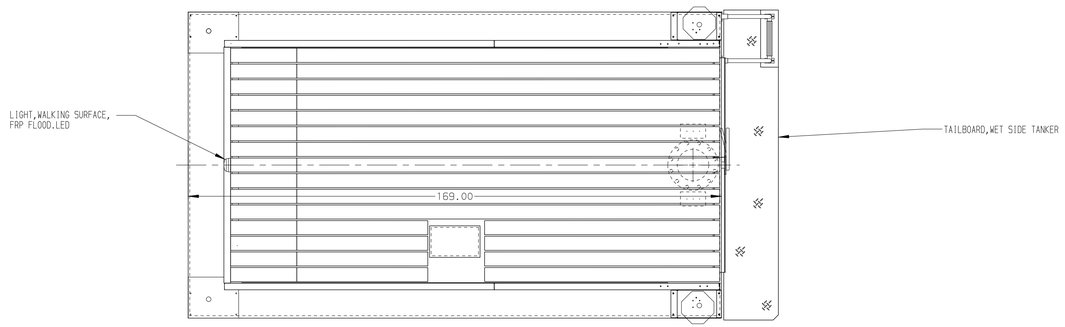

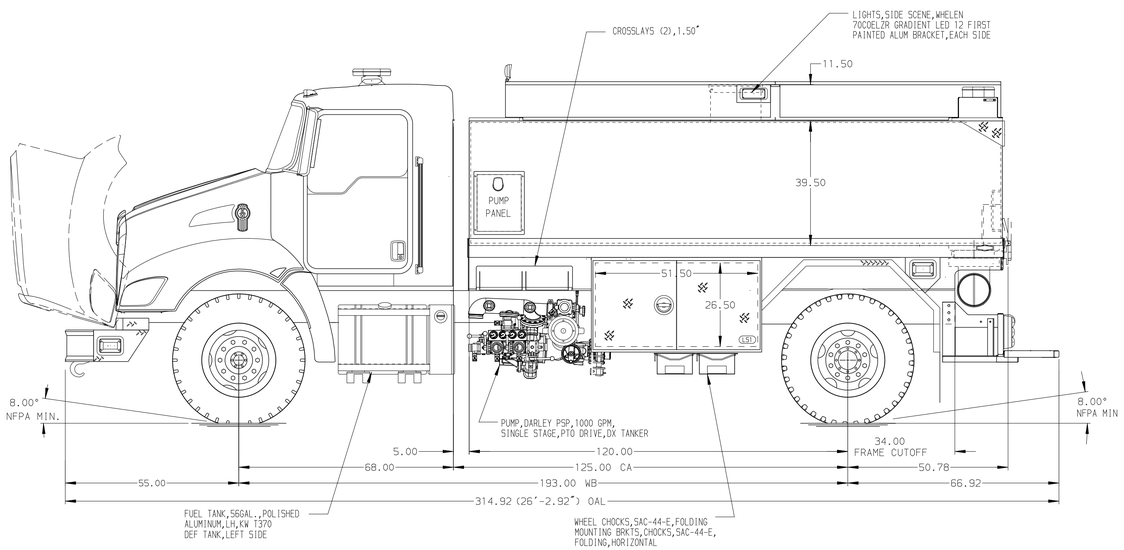

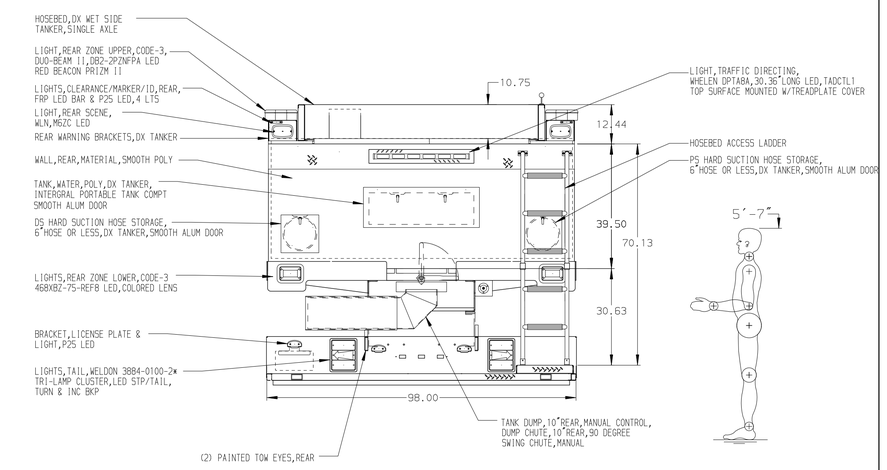

NOTE

DIMENSIONS SHOWN ARE APPROXIMATE AND ARE SUBJECT TO MINOR DEVIATIONS AS MAY OCCUR OR BE NECESSARY IN CONSTRUCTION.
MINOR DETAILS NOT SHOWN.

REV.	DATE	BY	CHK'D
7	04JAN21	JLA	-
7	03NOV20	RHU	RWI

CHASSIS DATA
CHASSIS: KENWORTH
MODEL: T370

Pierce MANUFACTURING INC.
BRADENTON, FLORIDA

TITLE: 1000-D-2100P,DX TANKER,154 BODY
DARLEY PSP 1000, 1000 GPM PUMP

FOR: UC DAVIS FD
DAVIS, CALIFORNIA

DRWG. NO. 35169AD

JOB NO.	35169
DATE	28JUL20
SCALE	1:24
DRAWN BY	JLA
CHK'D BY	RWI
SHEET NO.	1 OF 1
SHEET SIZE	D

View File Created 04-JAN-2021 13:36:39