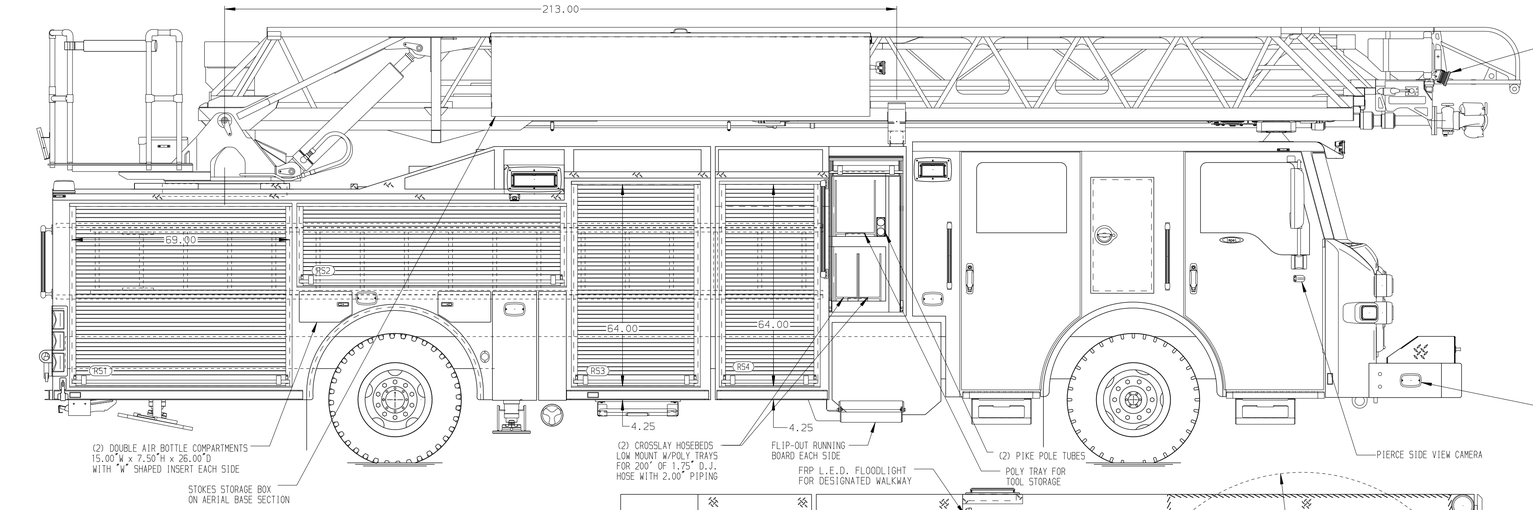

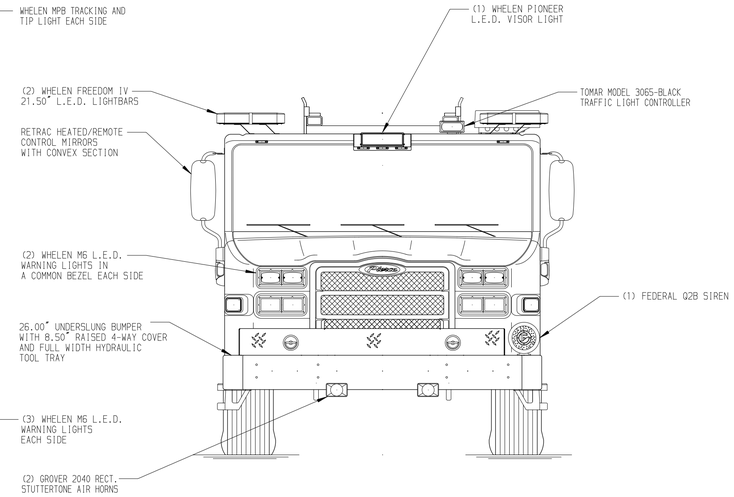

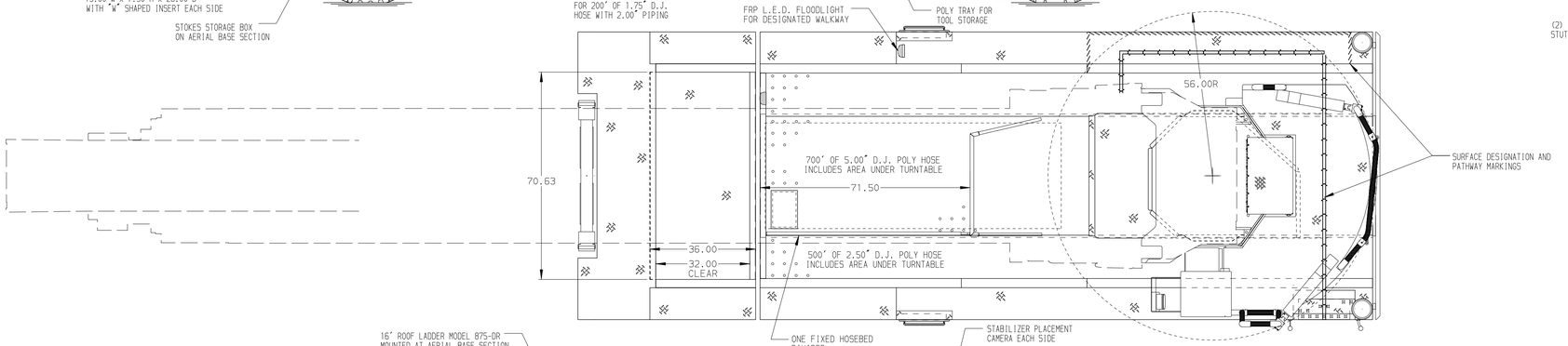

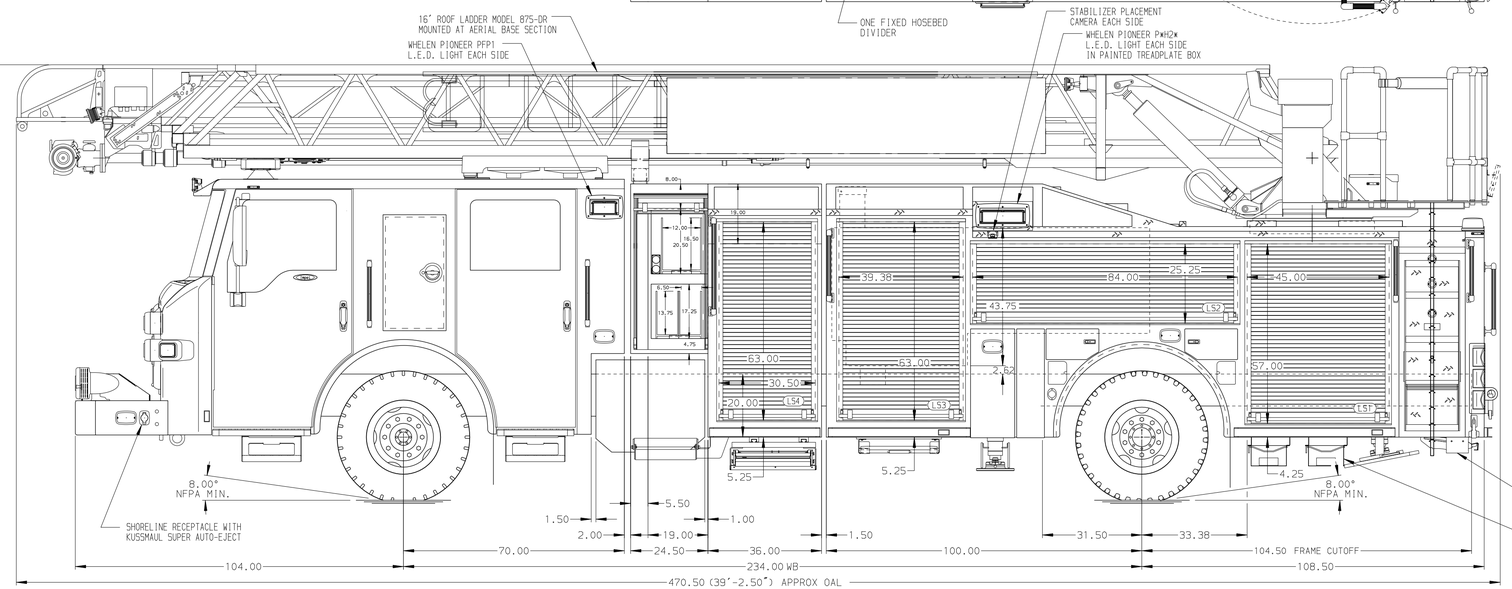

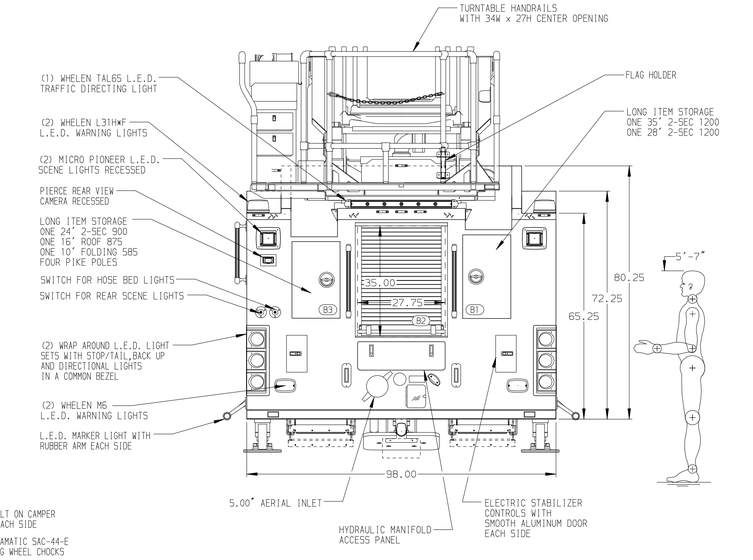

ALUMINUM BODY | SIDE ROLL & FRONTAL IMPACT PROTECTION | O.A.H. 141" | O.A.L. 480"

NOTE

DIMENSIONS SHOWN ARE APPROXIMATE AND ARE SUBJECT TO MINOR DEVIATIONS AS MAY OCCUR OR BE NECESSARY IN CONSTRUCTION.
MINOR DETAILS NOT SHOWN.

1. AIR INLET WITH DISCONNECT COUPLING LOCATED PER SHOP ORDER
2. BATTERY CHARGER LOCATED BEHIND DRIVER'S SEAT
3. BATTERY CHARGER INDICATOR LOCATED AT DRIVER'S SIDE STEP AREA
4. L.E.D. LIGHT STRIPS LOCATED IN HOSE BED PER SHOP ORDER
5. TEN ADJUSTABLE FULL WIDTH/FULL DEPTH SHELVES IN COMPARTMENTS PER SHOP ORDER
6. ONE ADJUSTABLE TILTING SLIDE-OUT TRAY IN COMPARTMENT PER SHOP ORDER
7. ONE FLOOR MOUNTED SLIDE-OUT TRAY IN COMPARTMENT PER SHOP ORDER
8. ONE SWING-OUT ALUMINUM TOOL BOARD IN COMPARTMENT PER SHOP ORDER
9. ONE VERTICAL PARTITION IN COMPARTMENT PER SHOP ORDER
10. FIVE 120V DUPLEX RECEPTACLES LOCATED IN CAB PER SHOP ORDER
11. TWO 120V DUPLEX RECEPTACLES LOCATED IN COMPARTMENTS PER SHOP ORDER
12. TRIDENT FOLDING STEPS ON AERIAL DEVICE
13. L.E.D. LIGHTING ON AERIAL LADDER SECTIONS
14. 2-WAY INTERCOM SYSTEM BETWEEN AERIAL TIP AND TURNTABLE
15. LIFTING EYE ROPE RESCUE ATTACHMENT AT AERIAL TIP
16. LYFEPULLEY RESCUE SYSTEM AT AERIAL TIP
17. WIRELESS CAMERA LOCATED AT AERIAL EGRESS
18. 1500 GPM HIGH FLOW WATERWAY
19. LIMITED RETRACTION NOT REQUIRED

REV	DATE	BY	CH
V	12AUG20	JGA	PPE
V	18JUN20	TKA	PPE
V	06MAY20	JGA	NDA

CHASSIS DATA
MAKE: PIERCE
MODEL: IMPEL

Pierce MANUFACTURING INC.

TITLE: 107' ASCENDANT ASL AERIAL LADDER AND BODY ASSEMBLY 500 GALLON WATER TANK
FOR: CARPENTERSVILLE FIRE DEPARTMENT CARPENTERSVILLE, IL
DWG NO.: 35163AD

JOB NO.	SCALE	DRAWN BY	CHECKED BY	SHEET SIZE	SHEET NO.
35163	1:24	JGA	NDA	D	1 OF 1
	DATE	30APR20	5MAY20		

View File Created 12-AUG-2020 09:57:12