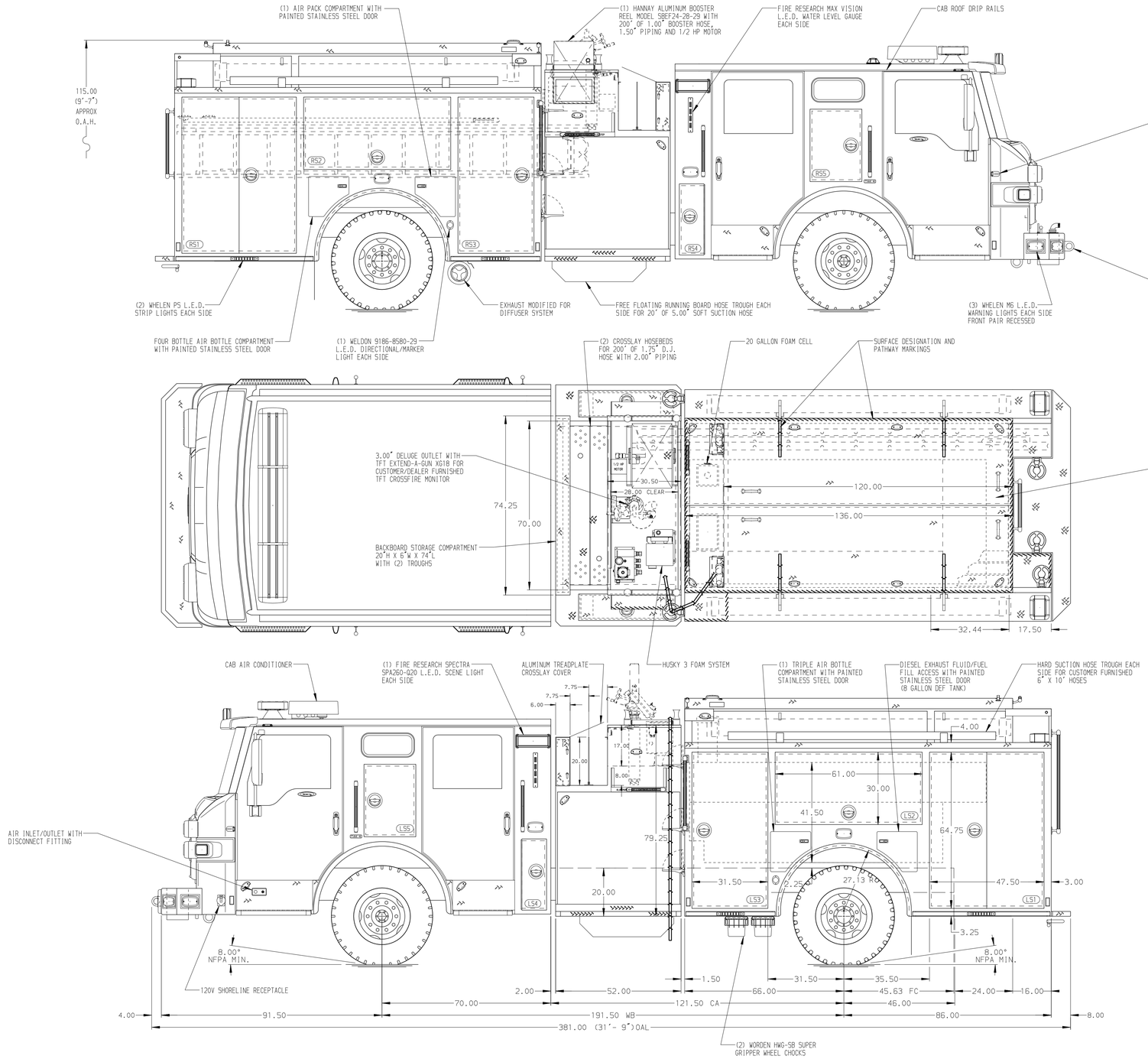

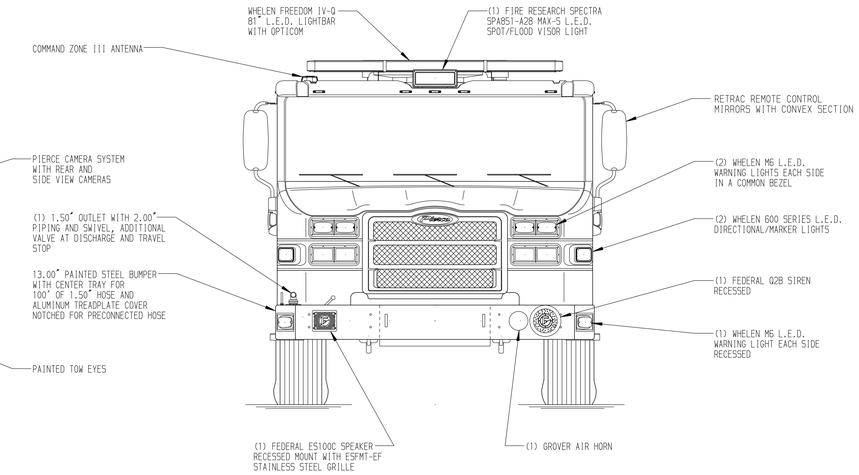

HOSEBED CAPACITIES

1. 250' OF 1.75" D.J.POLY HOSE
2. 800' OF 2.50" D.J.POLY HOSE
3. 800' OF 4.00" D.J.POLY HOSE
4. 1.75" HOSE PACKS

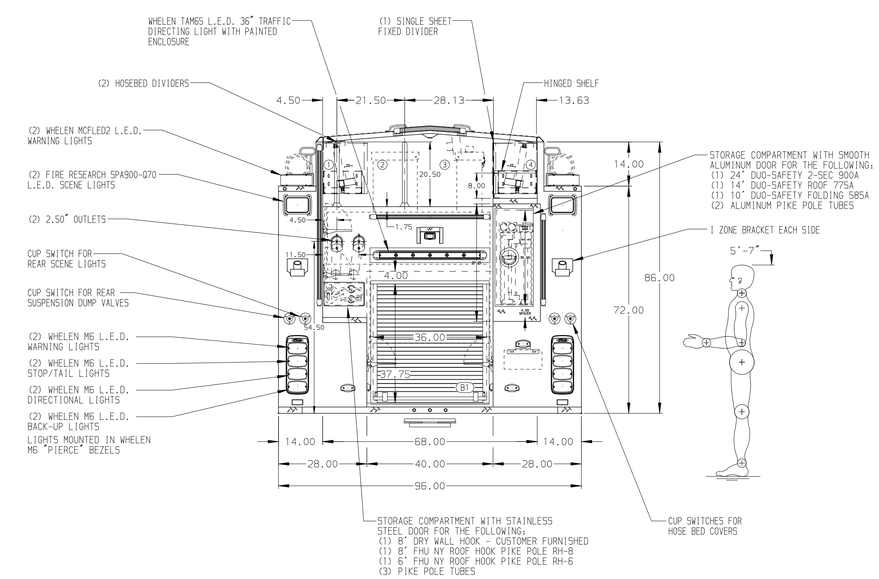

ALUMINUM BODY

SIDE ROLL AND FRONTAL IMPACT PROTECTION

NOTE

DIMENSIONS SHOWN ARE APPROXIMATE AND ARE SUBJECT TO MINOR DEVIATIONS AS MAY OCCUR OR BE NECESSARY IN CONSTRUCTION.
MINOR DETAILS NOT SHOWN.

1. KUSSMAUL BATTERY CHARGER LOCATED BEHIND DRIVER'S SEAT ON EMS CABINET WITH COVER
2. BATTERY CHARGE INDICATOR LOCATED NEAR DRIVER'S SEAT RISER WITH BRACKET
3. REVERSED HINGED DOOR ON COMPARTMENT LS3
4. DRIP PAN GUARD FOR ROLL-UP DOOR LOCATED B1
5. TWELVE FULL WIDTH/DEPTH ADJUSTABLE SHELVES - FOUR IN COMPARTMENT RS1; THREE IN LS3; TWO IN LS1 AND RS3; ONE IN B1
6. HORIZONTAL EQUIPMENT MOUNTING TRACKS IN COMPARTMENT LS2
7. CTECH DRAWER ASSEMBLY IN COMPARTMENT LS3
8. PARTITION BETWEEN COMPARTMENTS LS1/B1 AND RS1/B1
9. ONE VERTICAL PARTITION IN COMPARTMENT LS1
10. ALUMINUM PEGBOARD ON BACK WALL COMPARTMENTS RS2 AND RS3
11. ALUMINUM PEGBOARD WITH TRACKS ON THE SIDE WALL OF COMPARTMENT LS1

REV	DATE	BY	CH
7	22SEP20	JJS	CHR
6	21AUG20	JRO	CHR

CHASSIS DATA
MAKE: PIERCE
MODEL: VELOCITY

Pierce MANUFACTURING INC.

TITLE: 1500 MIDSHIP/300 AUX, 750 WATER/20 FOAM, 152" BODY CROSSLAYS, DELUGE, REEL, FOAM, LADDER COMPARTMENT
FOR: SOUTH SAN JOAQUIN COUNTY FIRE AUTHORITY TRACY, CALIFORNIA
DWG NO.: 35130AD

JOB NO.	35130 01,02,03
SCALE	1:24
DATE	
DRAWN BY	JRO 23JUN20
CHECKED BY	WKL 23JUN20
SHEET SIZE	D
SHEET NO.	1 OF 1

View File Created 23-SEP-2020 05:53:18