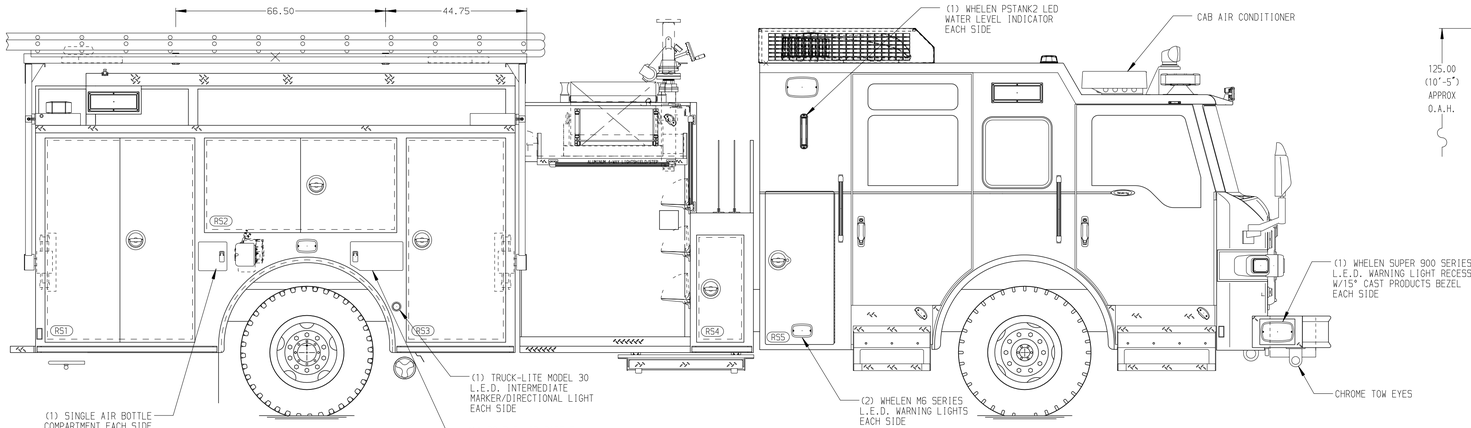

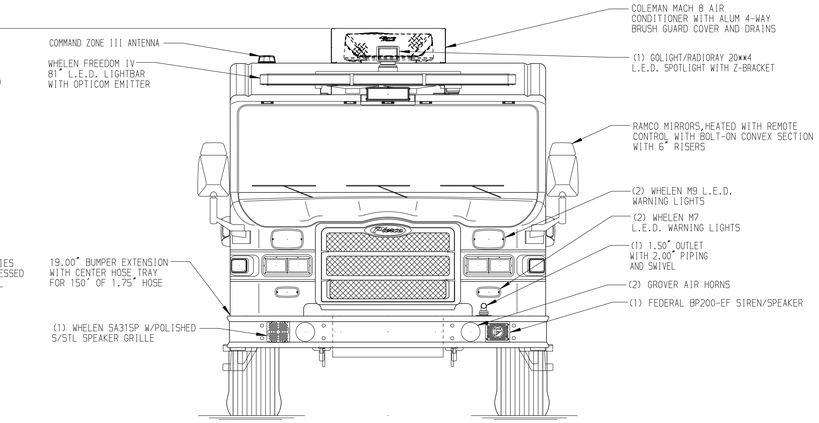

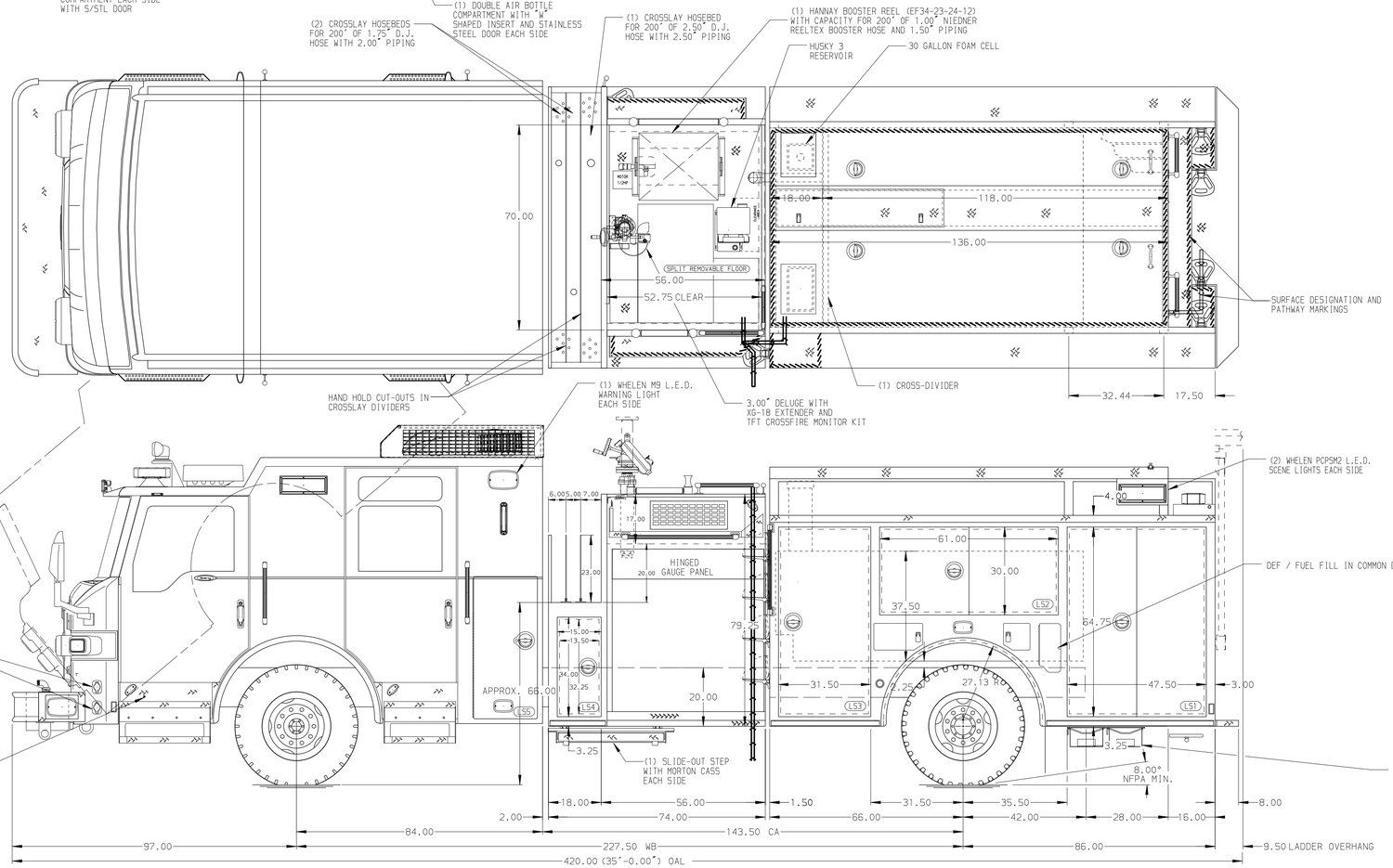

HOSEBED CAPACITIES

1. 1000' OF 5.00" HOSE
2. 300' OF 3.00" HOSE
3. OPEN

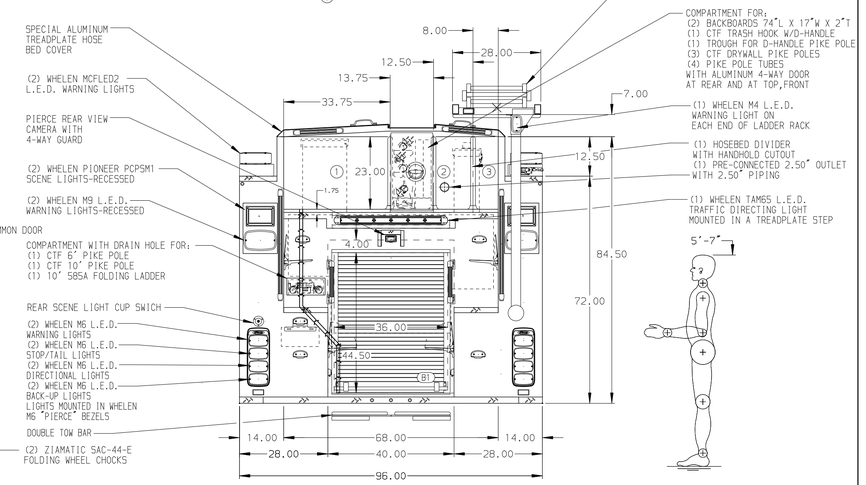

GALVANNEAL

SIDE ROLL AND FRONTAL IMPACT PROTECTION

NOTE

DIMENSIONS SHOWN ARE APPROXIMATE AND ARE SUBJECT TO MINOR DEVIATIONS AS MAY OCCUR OR BE NECESSARY IN CONSTRUCTION.
MINOR DETAILS NOT SHOWN.

1. KUSSMAUL BATTERY CHARGER LOCATED HIGH ON LEFT WALL OF COMPARTMENT LS3
2. BATTERY CHARGE INDICATOR LOCATED ON D.S. SEAT WITH BRACKET
3. REVERSED HINGED DOOR ON COMPARTMENT LS3
4. S/STL SCUFFPLATE AT CAB DOOR JAMS
5. S/STL PROTECTIVE GUARD FOR ROLL-UP DOOR IN COMPARTMENT B1
6. ONE FULL WIDTH/DEPTH PAINTED ADJUSTABLE SHELF IN COMPARTMENT RS3 & B1; TWO IN LS1; THREE IN LS3
7. ONE FLOOR MOUNTED SLIDE-OUT TRAY IN COMPARTMENT LS1
8. SMOOTH "DA" ALUMINUM ON COMPARTMENT FLOOR IN LS1, LS3, RS1, RS3 & B1
9. DRAIN HOLE WITH SPLASH GUARD LOCATED IN EACH PIKE POLE COMPARTMENT
10. ALL BODY COMPARTMENTS WITH LOUVERS SHALL HAVE A REMOVABLE DUST FILTER
11. ALUMINUM PEGBOARD W/TRACKS ON THE BACK WALL OF COMPARTMENTS LS3,RS1
12. LOUVERS IN COMPARTMENT B1
13. PARTITION BETWEEN COMPARTMENTS LS1/B1 AND RS1/B1
14. TWO ZICO AIR BOTTLE HOLDERS W/TRACKS MOUNTED IN COMPARTMENTS LS2 & RS2

REV	DATE	BY	CH
7	07OCT20	JWO	GKH
6	28AUG20	JWO	WKL
5	28AUG20	JWO	GKH
4	09JUL20	KLE	WKL

CHASSIS DATA
MAKE: PIERCE
MODEL: VELOCITY FR

Pierce MANUFACTURING INC.

TITLE: 1500-D-750P W/30 FOAM, 152 BODY FULL HEIGHT FRONT & REAR, FDLER, HYD LADDER RACK, HUSKY 3

FOR: SUPERSTITION FIRE & MEDICAL DISTRICT
APACHE JUNCTION, ARIZONA

DWG NO. 35111AD

JOB NO.	35111
SCALE	1:24
DATE	19JUN20
DRAWN BY	JWO
CHECKED BY	EGO
DATE	01JUL20
SHEET SIZE	D
SHEET NO.	1 OF 1

View File Created 07-OCT-2020 12:34:49