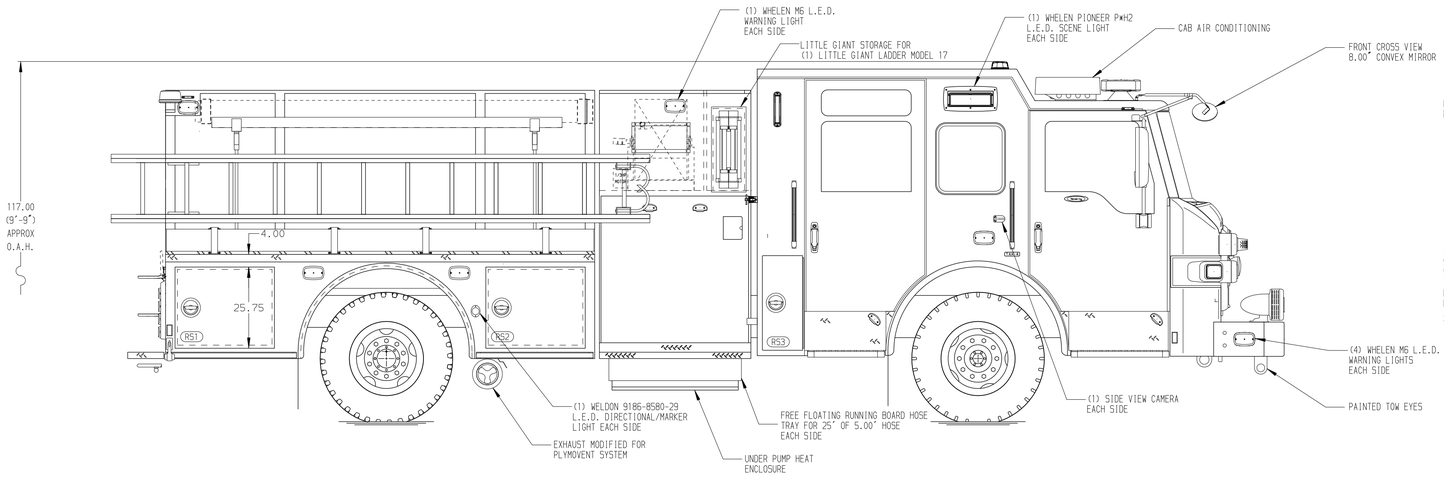

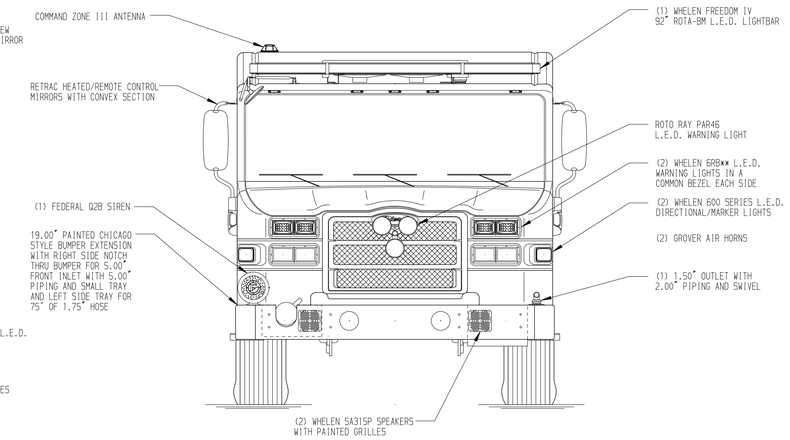

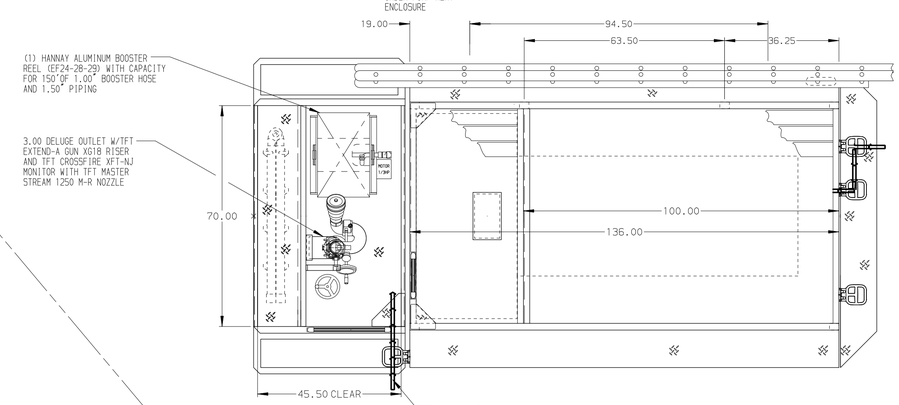

HOSEBED CAPACITIES

1. 300' OF 1.75" D.J. HOSE
2. 200' OF 1.75" D.J. HOSE
3. 400' OF 2.50" D.J. HOSE
4. 700' OF 4.00" D.J. HOSE
5. 200' OF 2.50" D.J. HOSE
6. 200' OF 1.75" D.J. HOSE
7. 300' OF 1.75" D.J. HOSE

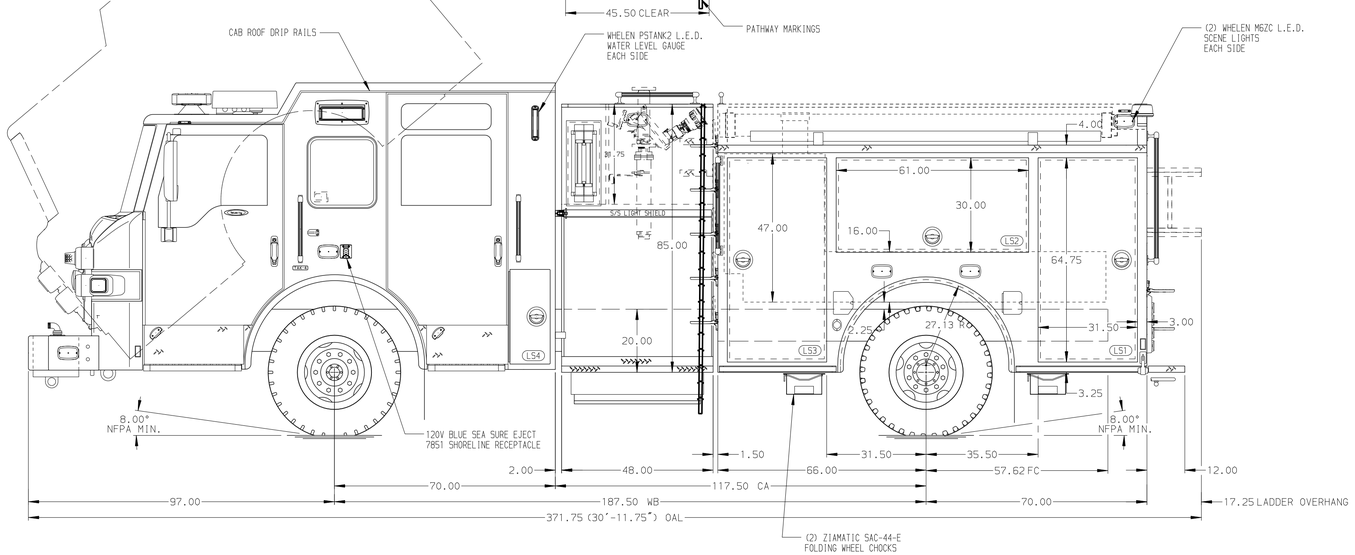

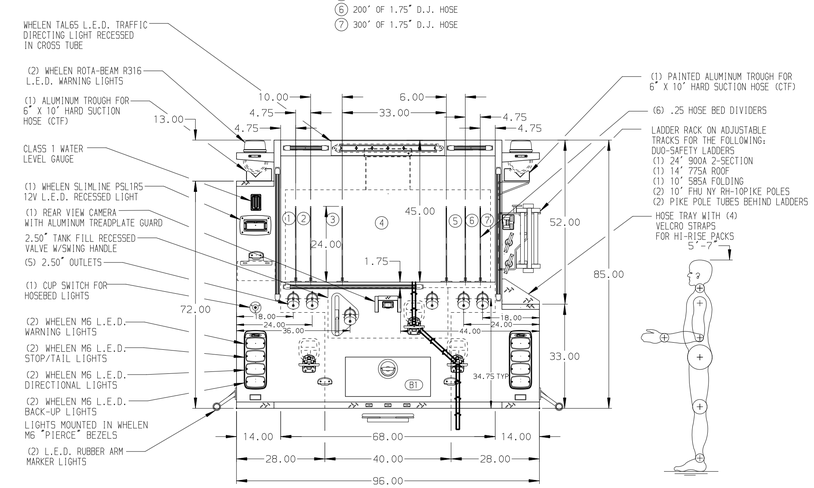

ALUMINUM BODY

SIDE ROLL AND FRONTAL IMPACT PROTECTION

NOTE

DIMENSIONS SHOWN ARE APPROXIMATE AND ARE SUBJECT TO MINOR DEVIATIONS AS MAY OCCUR OR BE NECESSARY IN CONSTRUCTION.
MINOR DETAILS NOT SHOWN.

1. BATTERY CHARGER LOCATED BEHIND DRIVER'S SEAT
2. BATTERY CHARGER INDICATOR BEHIND DRIVER'S SEAT DISPLAYED THROUGH WINDOW
3. DUAL L.E.D. LIGHT STRIPS LOCATED IN HOSE BED
4. PULL STRAP ON DOOR IN COMPARTMENT LS2
5. REVERSED HINGED DOOR ON COMPARTMENT LS3
6. ONE FULL WIDTH/DEPTH ADJUSTABLE SHELF IN COMPARTMENTS LS2 AND LS3; TWO IN LS1
7. ONE FLOOR MOUNTED SLIDE-OUT TRAY IN COMPARTMENT LS1
8. DRAIN HOLE WITH SPLASH GUARD LOCATED IN COMPARTMENTS LS1,LS2,LS3,RS1,RS2 AND B1
9. ALUMINUM PEGBOARD ON BACK WALL COMPARTMENT LS3
10. STORAGE RACK FOR 6 AIR BOTTLES LOCATED RS2
11. 120V DUPLEX RECEPTACLE LOCATED IN COMPARTMENT LS2 AND IN CAB

REV	DATE	BY	CH
7	070CT20	LME	JGO
6	22SEP20	JUS	JGO
5	14AUG20	LME	JGO
4	18JUN20	LME	NPE

CHASSIS DATA
MAKE: PIERCE
MODEL: VELOCITY

Pierce MANUFACTURING INC.

TITLE: 1500-D-500G WATERTANK, 136" BODY
DELUGE, ADJUSTABLE LADDER RACK BRACKET, BOOSTER REEL

FOR: JOHNSTON GRIMES METROPOLITAN FIRE DEPT.
JOHNSTON, IOWA

DWG NO.: 35109AD

JOB NO.	35109
SCALE	1:24
DATE	
DRAWN BY	LME
DATE	11JUN20
CHECKED BY	NPE
DATE	12JUN20
SHEET SIZE	D
SHEET NO.	1 OF 1

View File Created 07-OCT-2020 13:42:01