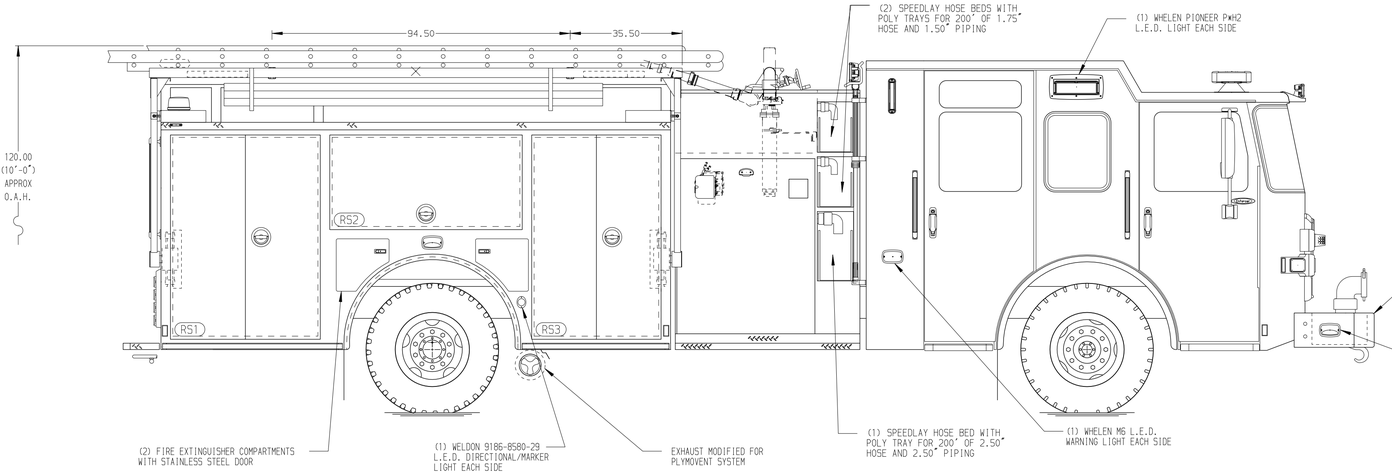

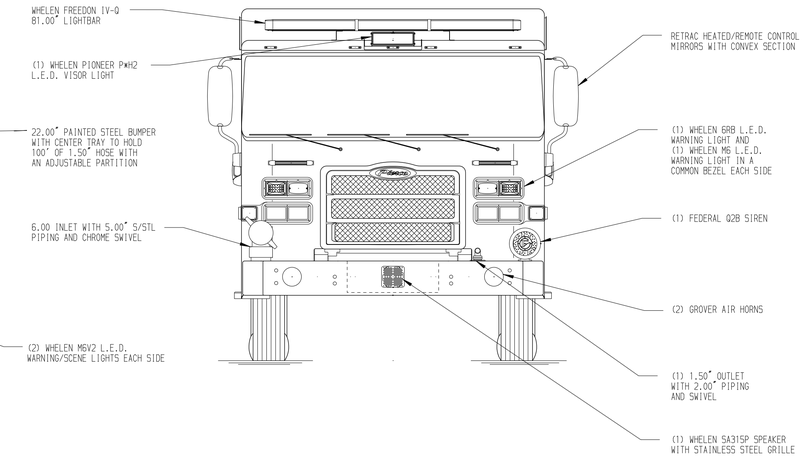

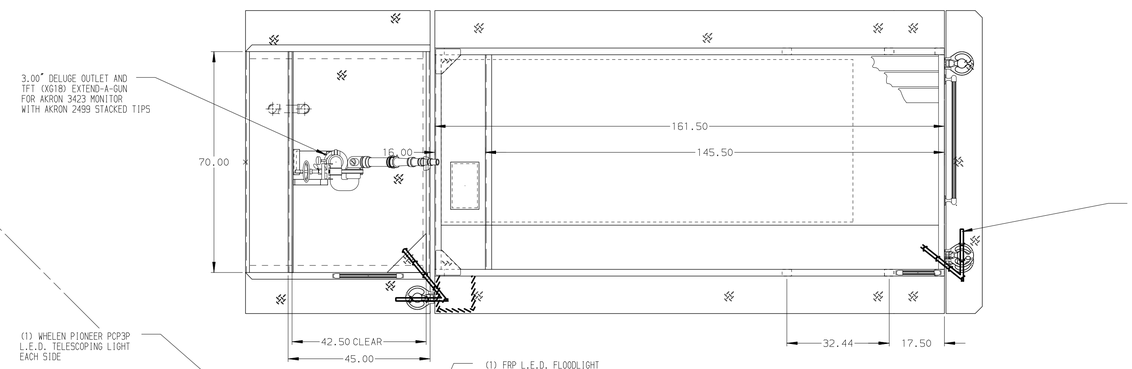

HOSEBED CAPACITIES

1. OPEN
2. 800' OF 4.00" HOSE
3. 600' OF 2.50" HOSE

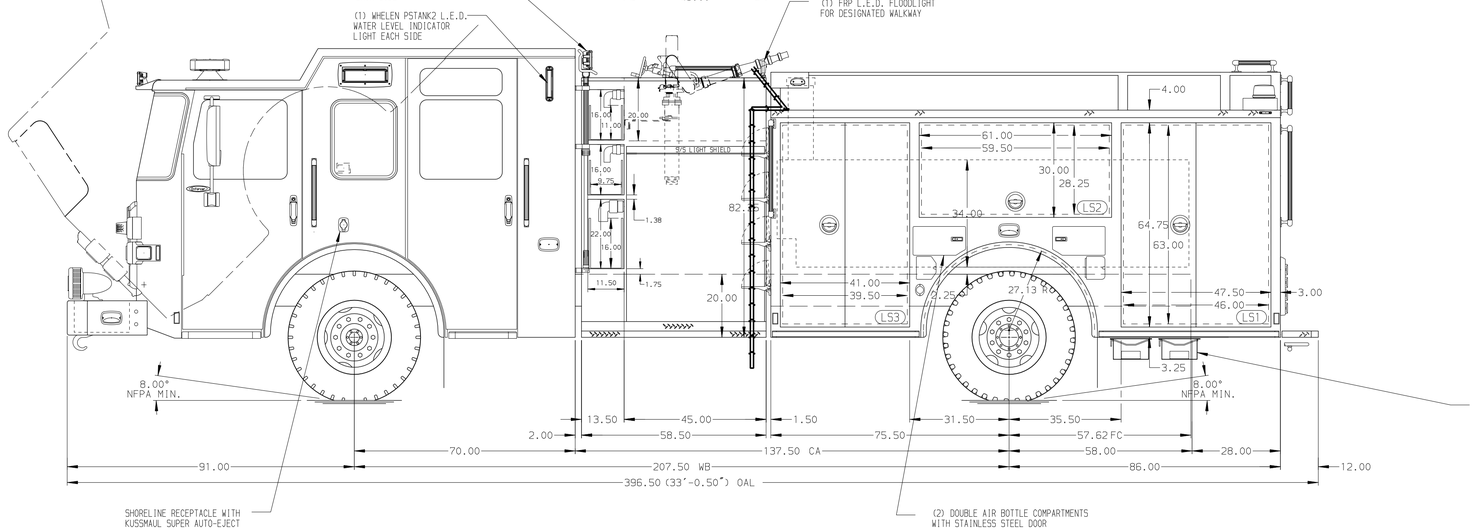

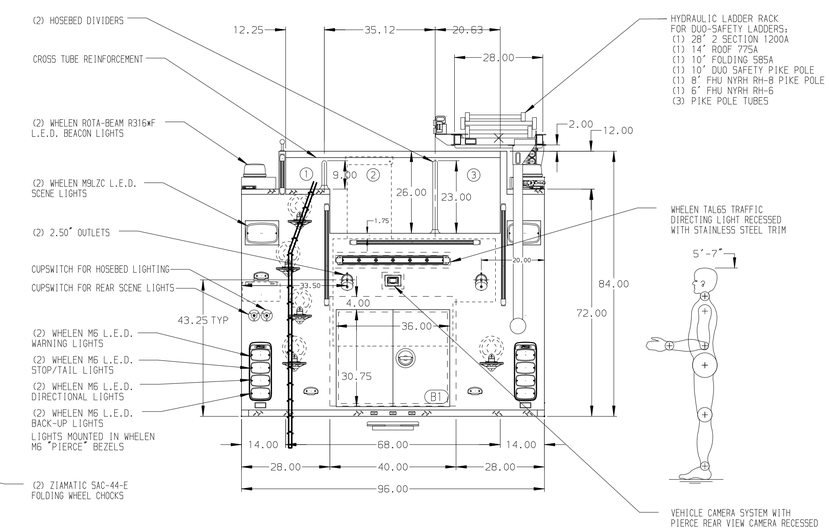

ALUMINUM BODY

SIDE ROLL AND FRONTAL IMPACT PROTECTION

NOTE

DIMENSIONS SHOWN ARE APPROXIMATE AND ARE SUBJECT TO MINOR DEVIATIONS AS MAY OCCUR OR BE NECESSARY IN CONSTRUCTION.
MINOR DETAILS NOT SHOWN.

1. VOGEL LUBE SYSTEM PUMP LOCATED PER SHOP ORDER
2. KUSSMAUL BATTERY CHARGER LOCATED LS3
3. AIR INLET WITH DISCONNECT COUPLING LOCATED DS STEP WELL FORWARD
4. BATTERY CHARGER INDICATOR BEHIND DRIVER'S SEAT DISPLAYED THROUGH WINDOW
5. THREE ADJUSTABLE SLIDE-OUT TRAYS IN LS3
6. ALUMINUM TOOLBOARD ADDED TO SLIDE-OUT TRAY IN LS3
7. ONE FLOOR MOUNTED SLIDE-OUT TRAY IN COMPARTMENT LS1
8. ONE TOOLBOARD TRAY IN LS3
9. ONE HORIZONTAL PARTITION IN COMPARTMENT LS3
10. FULL WIDTH/DEPTH ADJUSTABLE SHELVES TWO IN LS1 AND RS1 AND ONE IN LS2 AND RS2
11. PAC TRAC ON THE REAR WALL OF COMPARTMENT RS3
12. ONE VERTICAL PARTITION (SPECIAL HEIGHT) IN COMPARTMENT LS3
13. ONE SPECIAL WIDTH/ DEPTH SHELF IN RS3
14. 120V 4-PLACE RECEPTACLE BEHIND THE DRIVER'S SEAT, LS1, LS2, RS1, AND RS2

REV	DATE	BY	CH
V	11NOV20	COL	PPE
V	13JUL20	COL	LPA
V	04JUN20	COL	PJP

CHASSIS DATA
MAKE: PIERCE
MODEL: ENFORCER

Pierce MANUFACTURING INC.

TITLE: 1500-D-750P, 161" BODY FH/FD LS, FH FRONT & REAR FDLER RS, (3)SPEEDLAYS, HYDR. LADDER RACK, DELUGE

FOR: PALATINE FIRE DEPARTMENT
PALATINE, ILLINOIS

DWG NO.: 35091AD

JOB NO.	35091
SCALE	1:24
DATE	
DRAWN BY	COL 09MAR20
CHECKED BY	NPE 9MAR20
SHEET SIZE	D
SHEET NO.	1 OF 1

View File Created 13-NOV-2020 06:56:27