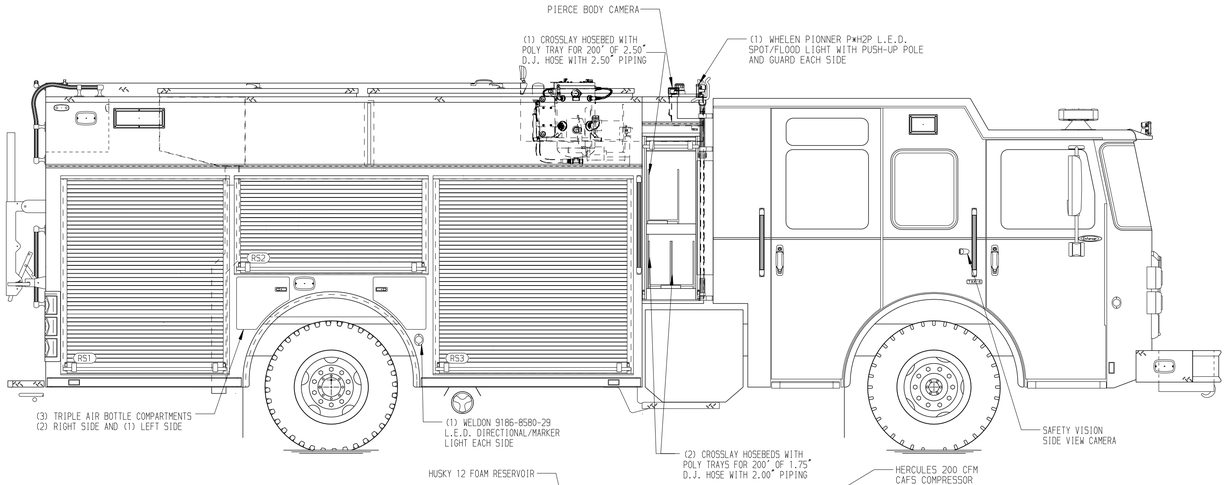

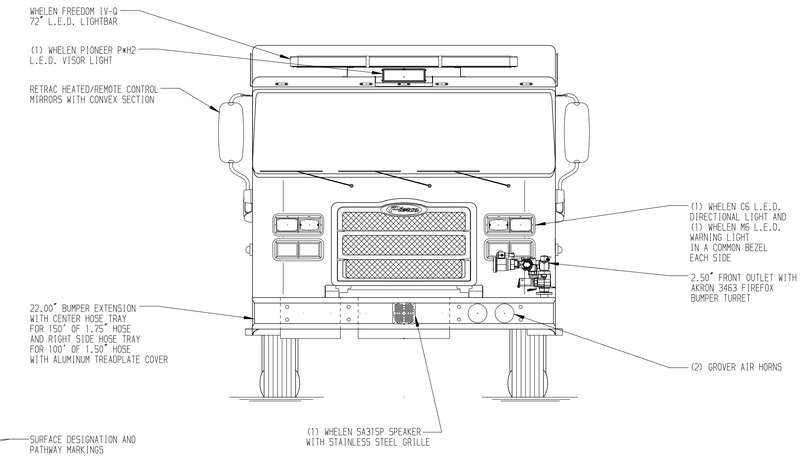

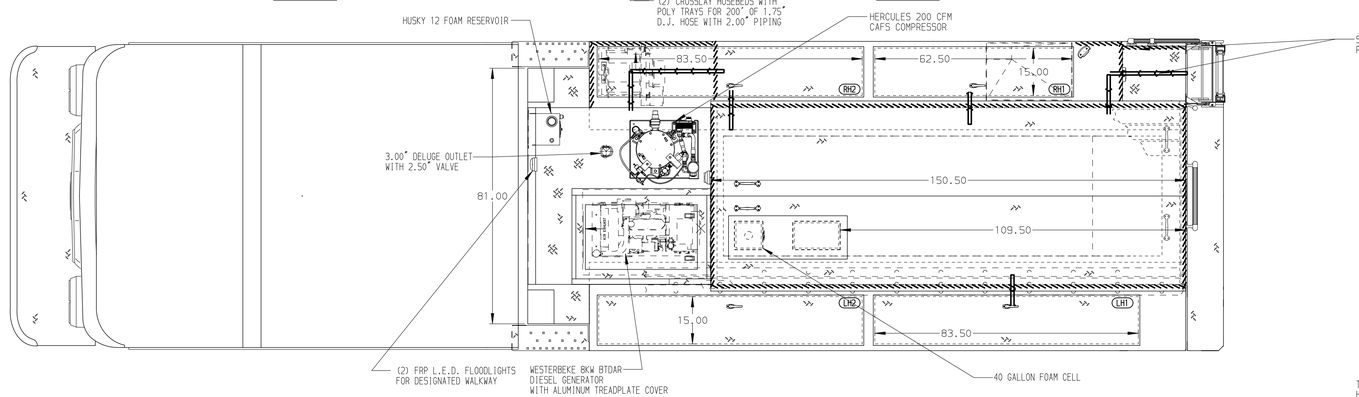

HOSEBED CAPACITIES

1. 1200' OF 4.00" HOSE
2. 400' OF 1.75" HOSE

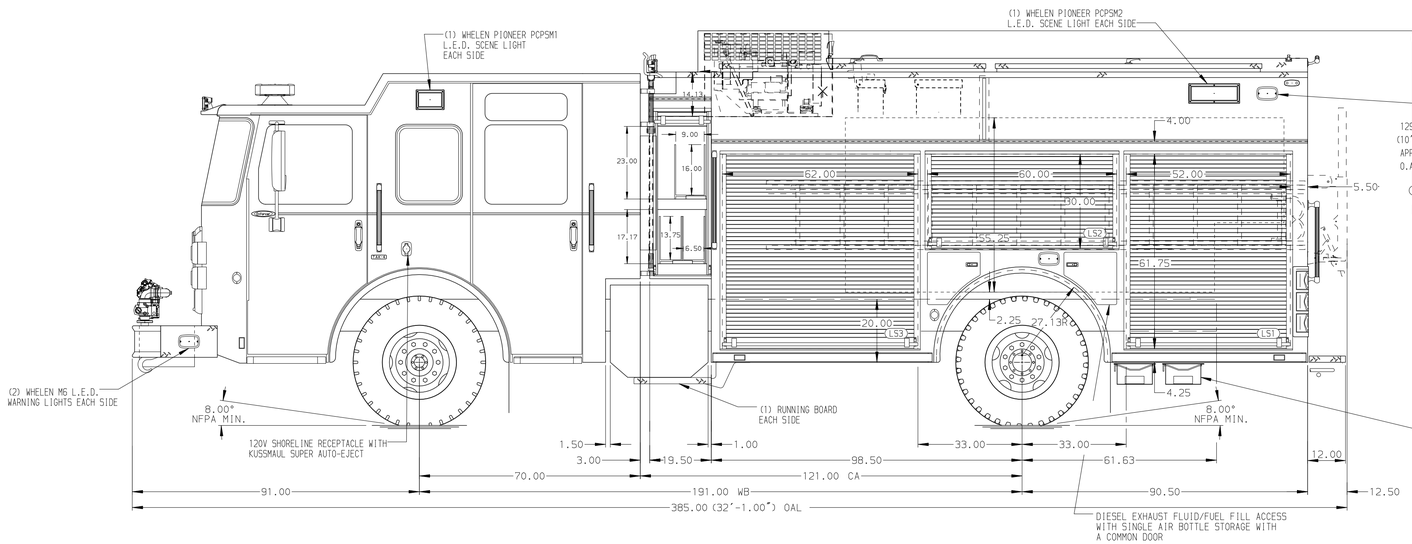

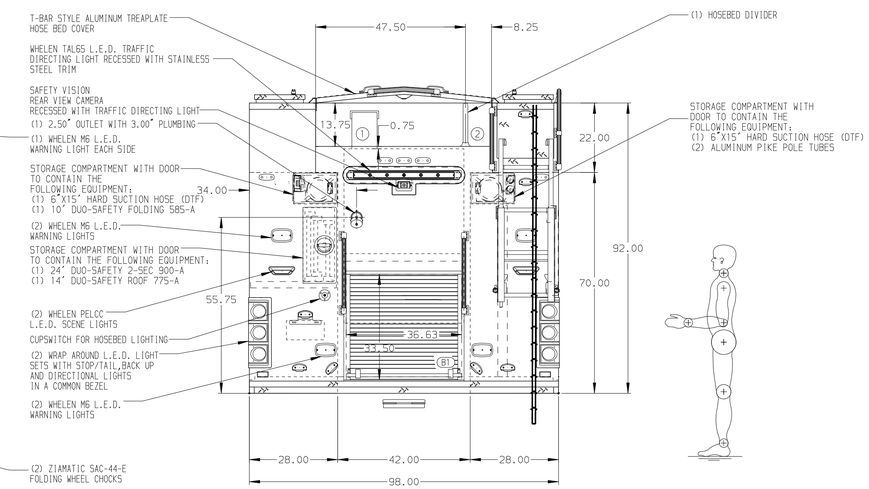

ALUMINUM BODY

SIDE ROLL AND FRONTAL IMPACT PROTECTION

NOTE

DIMENSIONS SHOWN ARE APPROXIMATE AND ARE SUBJECT TO MINOR DEVIATIONS AS MAY OCCUR OR BE NECESSARY IN CONSTRUCTION.
MINOR DETAILS NOT SHOWN.

1. ONSPOT AUTOMATIC TIRE CHAINS PROVIDED AT THE REAR
2. AIR INLET WITH DISCONNECT COUPLING ON DRIVER'S SIDE STEPWELL
3. BATTERY CHARGER LOCATED IN LS3
4. BATTERY CHARGER INDICATOR LOCATED ON DRIVER'S SEAT RISER
5. DUAL L.E.D. LIGHT STRIPS LOCATED IN HOSE BED
6. FULL WIDTH/DEPTH ADJUSTABLE SHELVES THREE IN LS3, TWO IN LS1 AND RS3, AND ONE IN LS2 AND B1
7. ONE FLOOR MOUNTED SLIDE-OUT TRAY IN B1
8. CIRCUIT BREAKER PANEL IN LS3
9. HANNAY MODEL E161B-17-18 ELECTRIC CORD REEL FOR 200' OF 10/3 CORD IN RH2
10. ONE 120V 6-PLACE RECEPTACLE STRIP IN MOUNTED ON THE FRONT OF THE REAR CAB TO THE ENGINE COVER AND REAR WALL OF CAB CENTER TOP
11. ONE 50A 120/240V WEATHER PROOF TWIST LOCK RECEPTACLE IN RS1
12. ONE ADJUSTABLE SLIDE-OUT TRAY IN RS1
13. ONE ADJUSTABLE TILT/ SLIDE-OUT TRAY IN RS1, RS2, AND RS3
14. OIL DRY HOPPER WITH 100 LBS. OF OIL DRY ABSORBENT IN RH1

REV	DATE	BY	CH
1	02DEC20	LST	CWI
2	28SEP20	LST	CWI
3	25AUG20	LST	CWI

CHASSIS DATA
MAKE: PIERCE
MODEL: ENFORCER

Pierce MANUFACTURING INC.

TITLE: 1500-D-1040P, 1000 GAL OF WATER W/ 40 GAL FOAM CELL 189" PUC RESCUE, LADDERS THRU BODY, (3) CROSSLAYS
FOR: EXETER FIRE DEPARTMENT VOL # 2 EXETER, RHODE ISLAND
DWG NO.: 35059AD

JOB NO.	35059
SCALE	1:24
DATE	
DRAWN BY	LST 09JUN20
CHECKED BY	EGO 11JUN20
SHEET SIZE	D
SHEET NO.	1 OF 1

View File Created 03-DEC-2020 08:36:07