Pumper, PUC

BODY
Pumper, PUC, Aluminum

CHASSIS
Impel Chassis, PUC

CHASSIS

AXLE, FRONT, CUSTOM
19,500 lb Dana Axle

AXLE, REAR
27,000 lb Dana Axle

ENGINE
400 HP Cummins L9 Engine

TRANSMISSION
Allison 5th Gen, 3000 EVS P

BUMPER
19" Extended Painted Steel

CAB
7000 Impel FR Cab, PUC

BODY

WATER TANK
750 Gallon Poly Water Tank

COMPT, PUMPER, REAR
40.50" FF Rollup Rear Compt w/Tailboard, PUC

COMPT, PUMPER, LEFT SIDE
177" Rollup Full Height & Depth Front & Rear, PUC

COMPT, PUMPER, RIGHT SIDE
177" Rollup Full Height & Depth Front & Rear, PUC

FIRE SUPPRESSION

PUMPHOUSE
Control Zone, PUC

PUMP
1500 GPM Pierce PUC

CROSSLAYS, 1.50"
(2) 1.50", Poly Trays, 200'

CROSSLAYS, 2.50"
(1) 2.50", Poly Tray, 200'

GENERATOR
Generator Not Required

Foam System
Foam System Not Required

Foam Cell
Foam Cell Not Required

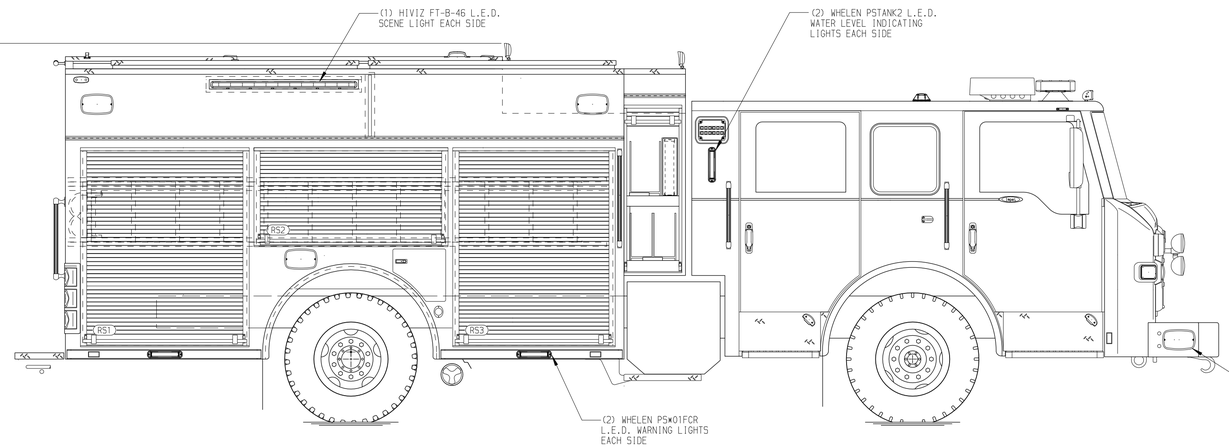

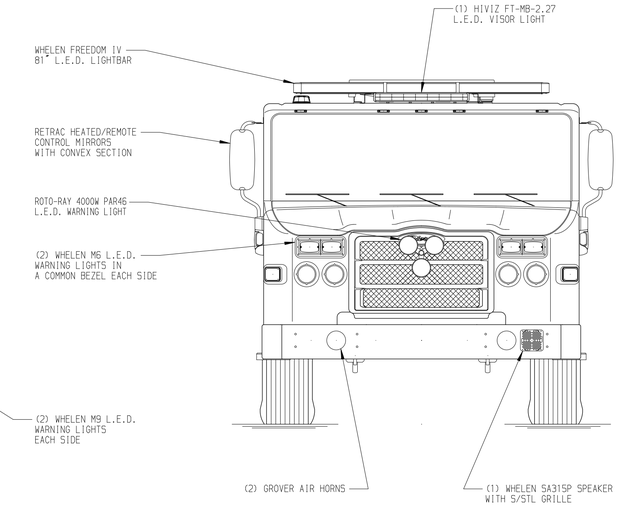

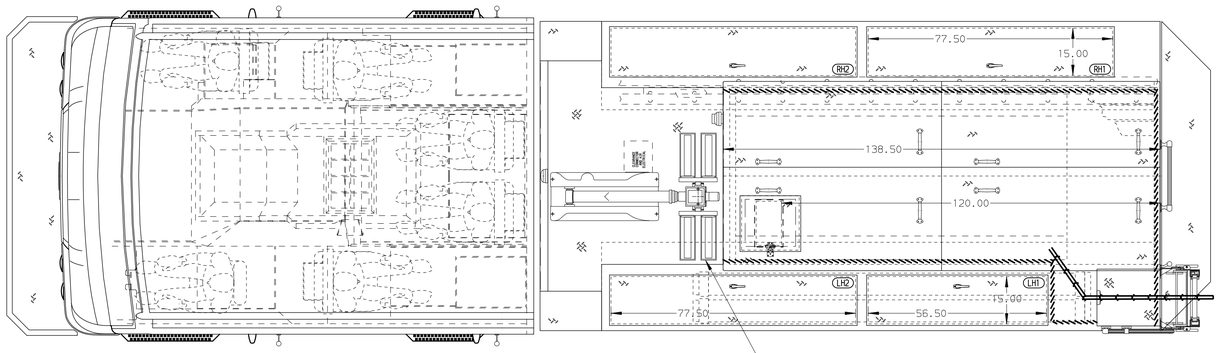

HOSEBED CAPACITY
BED 1
200' OF 2.50" D.J. POLY HOSE
BED 2
1200' OF 5.00" NITRILE RUBBER HOSE

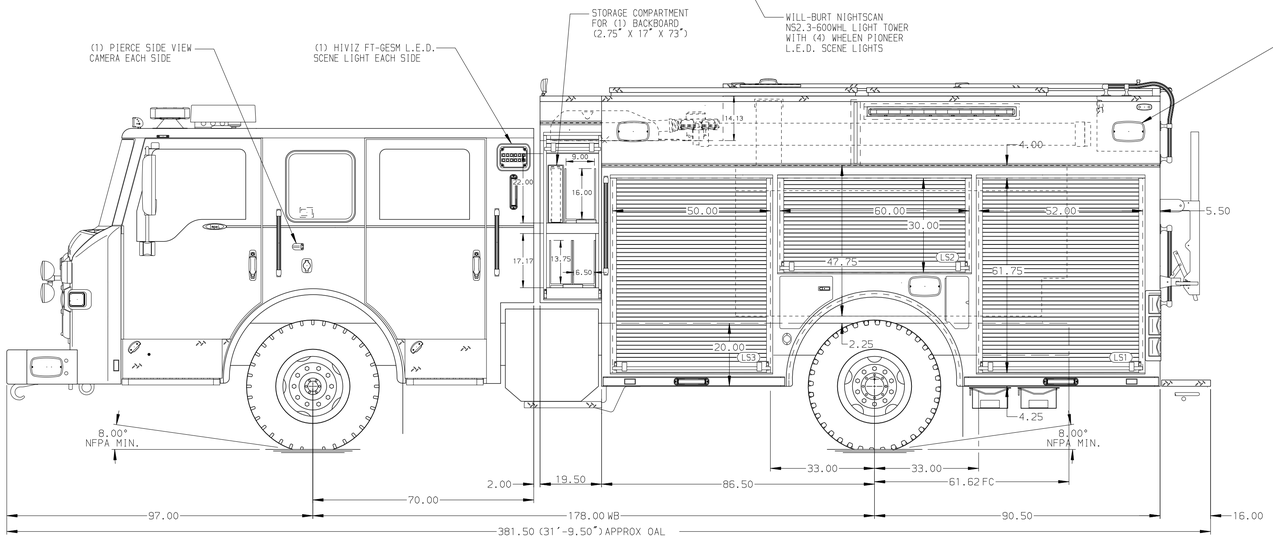

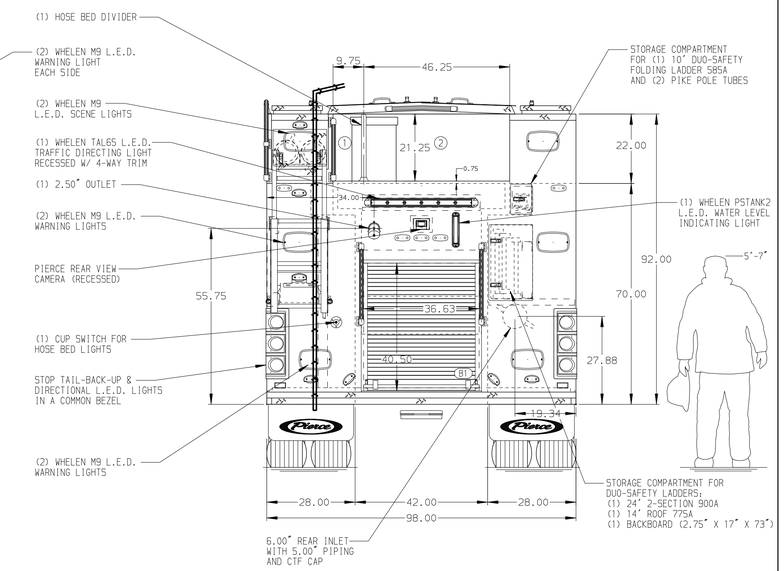

Pierce MANUFACTURING INC.

JOB NO.	35009
SCALE	1:24
DATE	
DRAWN BY	COL
DATE	21APR20
CHECKED BY	NPE
DATE	21APR20
SHEET SIZE	D
SHEET NO.	1 OF 1

TITLE: Pierce PUC Pumper Approval Drawing
FOR: Creve Coeur Fire Department
DWG NO.: 35009AD

CHASSIS DATA
MAKE: PIERCE
MODEL: IMPEL FR

REV	DATE	BY	CH
B	13JUL20	COL	GKH
A	27MAY20	COL	GKH

NOTE

DIMENSIONS SHOWN ARE APPROXIMATE AND ARE SUBJECT TO MINOR DEVIATIONS AS MAY OCCUR OR BE NECESSARY IN CONSTRUCTION.
MINOR DETAILS NOT SHOWN.

1. SHORELINE RECEPTACLE WITH KUSSMAUL SUPER AUTO-EJECT LOCATED ON DRIVER SIDE OF THE CAB
2. AIR INLET WITH DISCONNECT COUPLING IN THE DRIVER SIDE STEPWELL
3. BATTERY CHARGER LOCATED IN PUC PLUMBING AREA
4. BATTERY CHARGE INDICATOR DISPLAYED THROUGH DRIVER SIDE WINDOW
5. EIGHT ADJUSTABLE SHELVES LOCATED PER SHOP ORDER
6. THREE FLOOR MOUNTED SLIDE-OUT TRAYS LOCATED PER SHOP ORDER
7. TWO SLIDE-OUT TOOLBOARDS ADDED TO SLIDE OUT TRAY LOCATED PER SHOP ORDER
8. ONE SWING-OUT TOOLBOARD LOCATED PER SHOP ORDER
9. ONE VERTICAL PARTITION LOCATED PER SHOP ORDER
11. ALUMINUM PEGBOARD LOCATED PER SHOP ORDER
12. FOUR 120V DUPLEX RECEPTACLES LOCATED PER SHOP ORDER

View File Created 14-JUL-2020 09:07:32