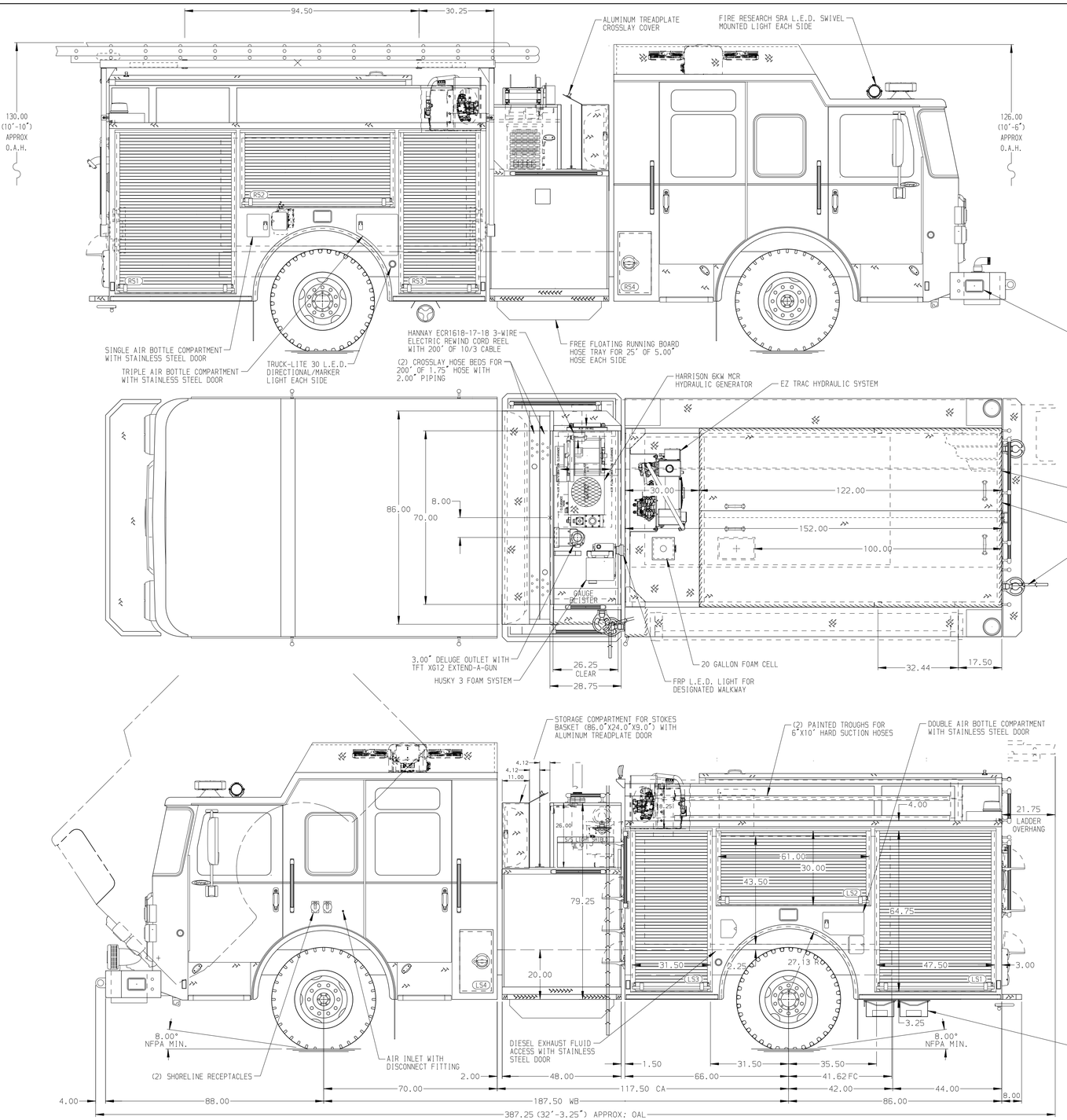

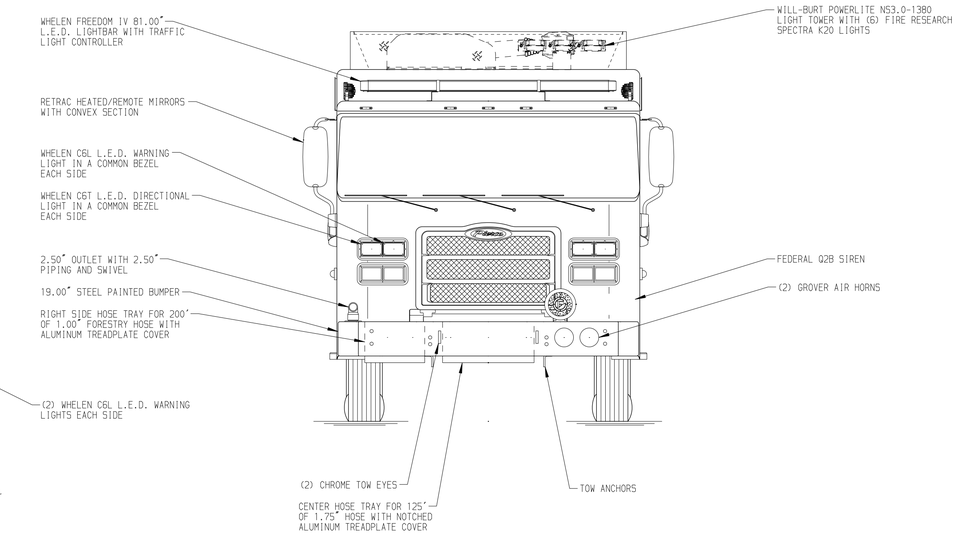

HOSEBED CAPACITIES

1. 500' OF 1.75" D.J. POLY HOSE
2. 600' OF 3.00" D.J. POLY HOSE
3. 650' OF 5.00" D.J. POLY HOSE
4. 200' OF 2.50" D.J. POLY HOSE

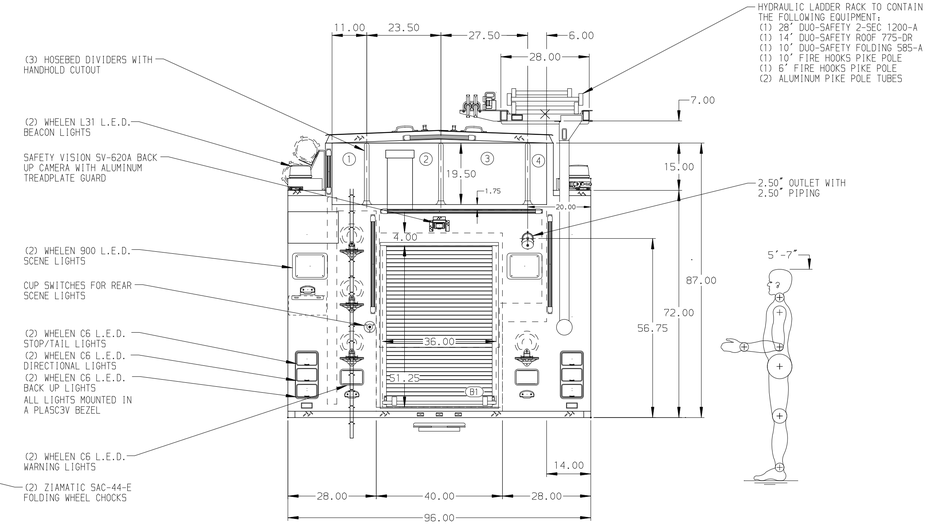

ALUMINUM BODY | MAXIMUM O.A.H. 130.00" | SIDE ROLL PROTECTION

NOTE

DIMENSIONS SHOWN ARE APPROXIMATE AND ARE SUBJECT TO MINOR DEVIATIONS AS MAY OCCUR OR BE NECESSARY IN CONSTRUCTION.
MINOR DETAILS NOT SHOWN.

1. ONSPOT TIRE CHAINS PROVIDED AT THE REAR
2. ONE FULL WIDTH/DEPTH ADJUSTABLE SHELF WITH SIDES IN COMPARTMENT-LS3,B1;TWO IN LS1; THREE IN RS1,RS3
3. ONE SPECIAL SIZE ADJUSTABLE SHELF WITH SIDES IN COMPARTMENT-LS2
4. ONE FLOOR MOUNTED SLIDE-OUT TRAY WITH SIDES IN COMPARTMENT-B1
5. ONE SWING-OUT TOOLBOARD IN COMPARTMENT-LS2
6. ONE MOUNTING PLATE IN COMPARTMENT-LS3
7. PARTITION BETWEEN COMPARTMENTS LS1/B1 AND RS1/B1
8. ONE VERTICAL PARTITION IN COMPARTMENT-LS3
9. CIRCUIT BREAKER PANEL LOCATED IN COMPARTMENT-LS3
10. TWO 120V DUPLEX RECEPTACLES IN CAB
11. ONE 120V DUPLEX RECEPTACLE IN COMPARTMENT-LS1

REV	DATE	BY	CH
V	13JUL20	BKB	GKH
V	03JUN20	BST	GKH
V	20APR20	BST	WKL

CHASSIS DATA
MAKE: PIERCE
MODEL: ENFORCER

Pierce MANUFACTURING INC.

TITLE: 1500-D-750P W/20 GAL. FOAM CELL,DELUGE,GENERATOR 152"PUMPER BODY,HYDRAULIC LADDER RACK,LIGHT TOWER
FOR: KOOTENAI COUNTY FIRE AND RESCUE POST FALLS, ID
DWG NO.: 34979AD

JOB NO.	34979
SCALE	1:24
DATE	
DRAWN BY	BST 15APR20
CHECKED BY	WKL 16APR20
SHEET SIZE	D
SHEET NO.	1 OF 1

View File Created 14-JUL-2020 08:00:05