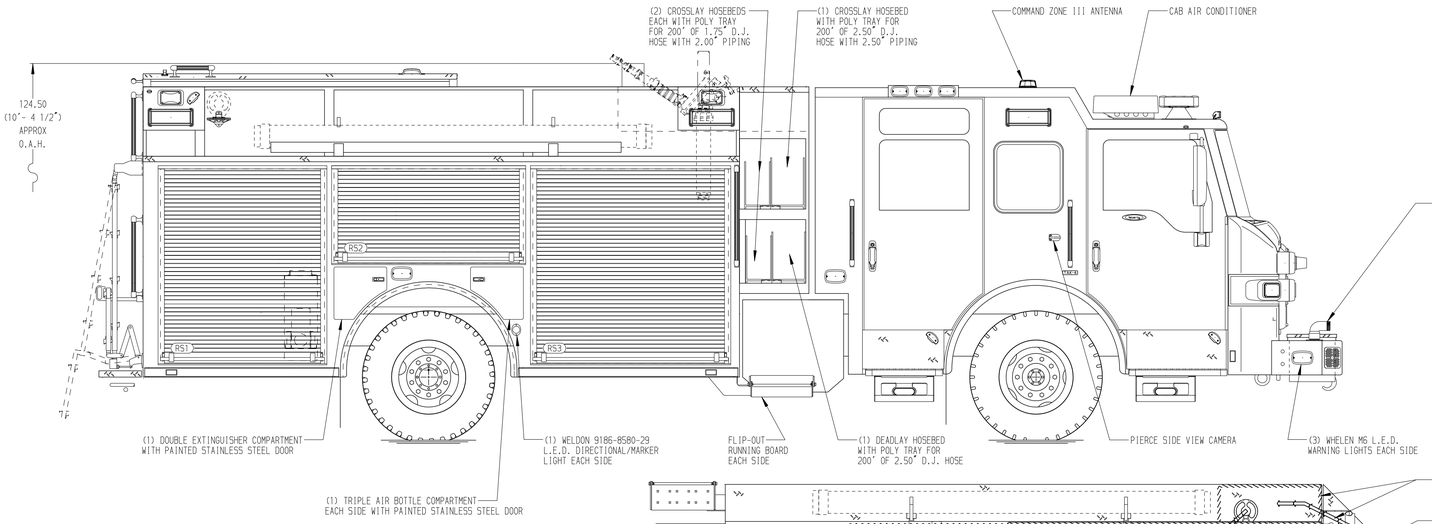

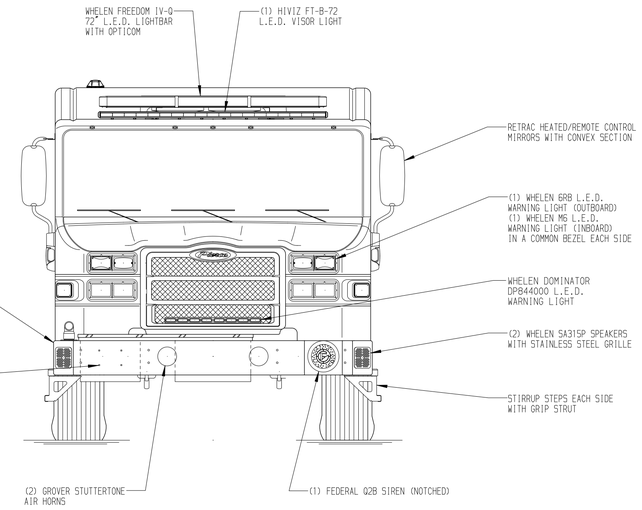

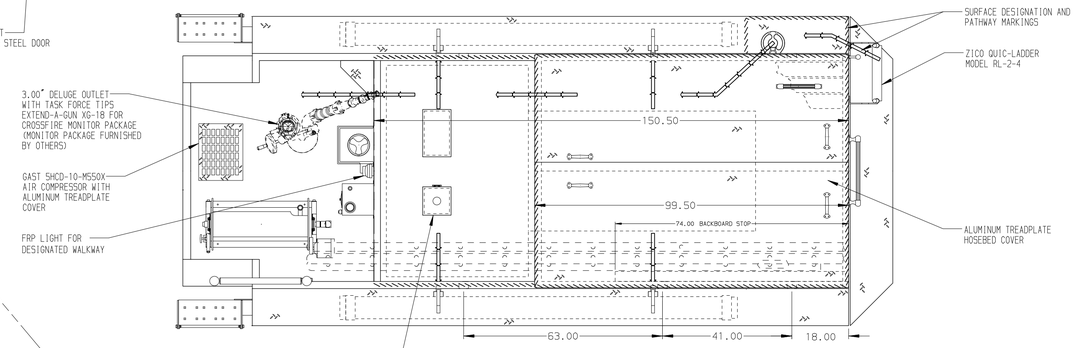

HOSEBED CAPACITIES

1. 400' OF 3.00" D.J. POLY HOSE
2. 200' OF 2.50" D.J. POLY HOSE
3. 1000' OF 5.00" D.J. POLY HOSE
4. 200' OF 3.00" D.J. POLY HOSE WITH 300' OF 1.75" D.J. POLY HOSE ON TOP

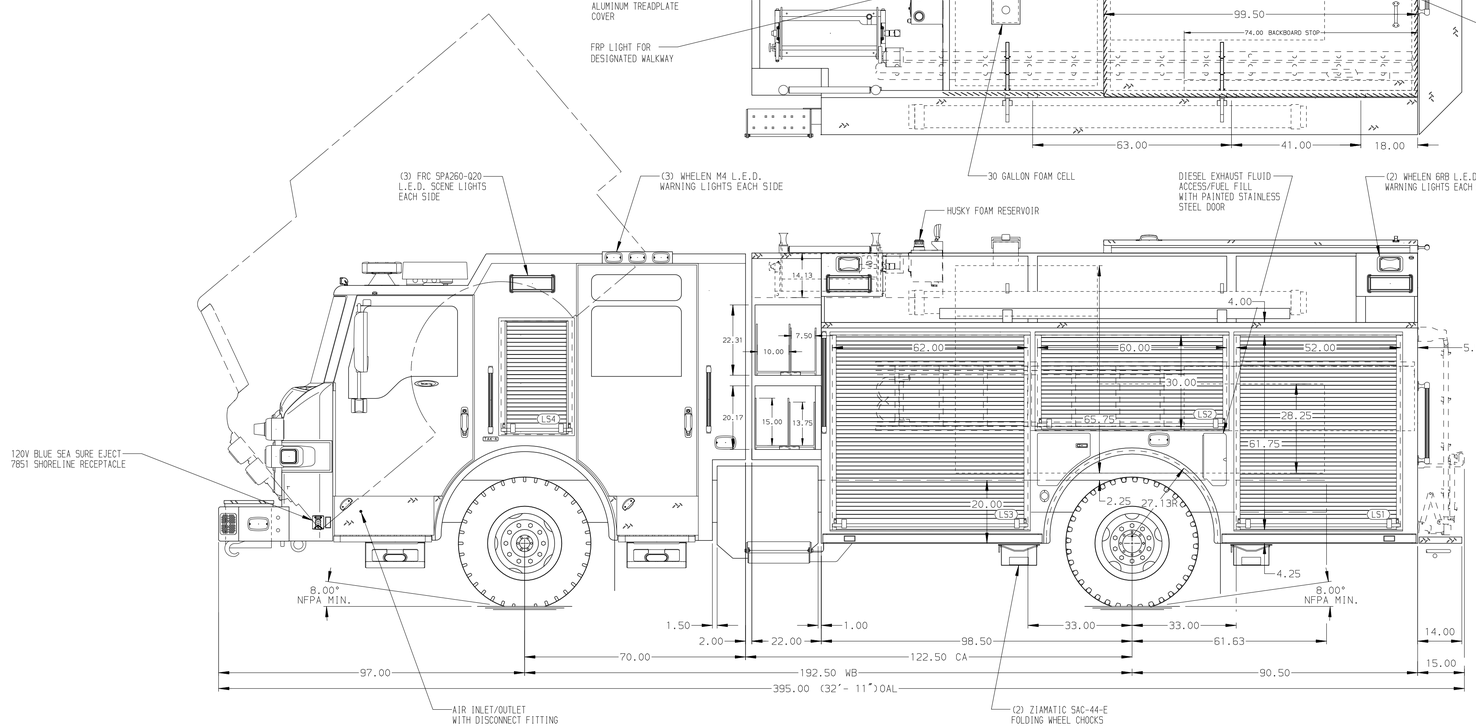

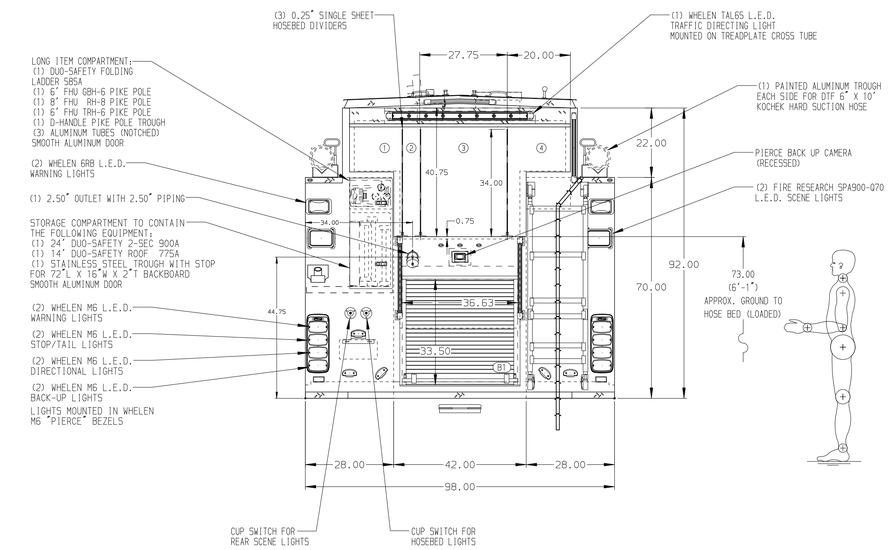

ALUMINUM BODY

SIDE ROLL AND FRONTAL IMPACT PROTECTION

NOTE

DIMENSIONS SHOWN ARE APPROXIMATE AND ARE SUBJECT TO MINOR DEVIATIONS AS MAY OCCUR OR BE NECESSARY IN CONSTRUCTION.
MINOR DETAILS NOT SHOWN.

1. BATTERY CHARGER LOCATED ON DRIVER'S SIDE EMS COMPARTMENT
2. BATTERY CHARGE INDICATOR LOCATED NEAR DRIVER'S SEAT RISER WITH BRACKET
3. DUAL L.E.D. LIGHT STRIPS LOCATED IN HOSE BED
4. FIVE FULL WIDTH/DEPTH ADJUSTABLE SHELVES - ONE IN COMPARTMENTS LS1, LS3, RS1 AND TWO IN RS3
5. ONE ADJUSTABLE TILTING SLIDE-OUT TRAY IN COMPARTMENTS RS1 AND RS3
6. FIVE FLOOR MOUNTED SLIDE-OUT TRAYS - ONE IN COMPARTMENT LS1 AND RS1, THREE IN RS3
7. ONE FULL WIDTH/DEPTH FLOOR MOUNTED SLIDE-OUT TRAY IN COMPARTMENT B1
8. TWO ADJUSTABLE TOOL BOARDS ON SLIDE OUT TRAYS IN COMPARTMENT RS3
9. ONE OIL DRY HOPPER MOUNTED ON FLOOR TRAY IN COMPARTMENT RS1
10. ONE VERTICAL BOLT-IN PARTITION BETWEEN COMPARTMENTS LS1/B1 AND RS1/B1
11. ONE VERTICAL PARTITION IN COMPARTMENT RS3
12. ALUMINUM PEGBOARD ON THE BACK WALL OF COMPARTMENT LS1, LS2 AND LS3
13. ALUMINUM PEGBOARD ON THE SIDE WALLS OF COMPARTMENT LS3
14. ONE THREE DRAWER CTECH ASSEMBLY LOCATED IN COMPARTMENT LS3
15. ONE HORIZONTAL PARTITION LOCATED IN COMPARTMENT LS3
16. HANNAY BOOSTER REEL MODEL EF4138-17-18 WITH 1/3 HP MOTOR AND 100' OF 0.75" BOOSTER HOSE (CAPACITY FOR 100' OF 1.00" HOSE) LOCATED IN CARGO AREA
17. ONE 120V DUPLEX RECEPTACLE IN COMPARTMENT B1
18. ONE 215# ADJUSTABLE TILT/SLIDE-OUT TRAY IN COMPARTMENT

REV	DATE	BY	CH
V	17SEP20	JRO	WKL
V	23JUL20	JRC	CHR
V	22JUN20	JRO	WKL
V	19JUN20	JRO	GKH

CHASSIS DATA
MAKE: PIERCE
MODEL: VELOCITY FR

Pierce MANUFACTURING INC.

TITLE: 1500-D-750 WATER/30 FOAM, 189" BODY, LADDER COMPART. CROSSLAYS/DEADLAY, DELUGE, FOAM SYSTEM
FOR: ROUND ROCK FIRE DEPARTMENT, ROUND ROCK, TEXAS
DWG NO.: 34959AD

JOB NO.	34959
SCALE	1:24
DATE	
DRAWN BY	JRO
	10APR20
CHECKED BY	WKL
	13APR20
SHEET SIZE	D
SHEET NO.	1 OF 1

View File Created 21-SEP-2020 08:17:13