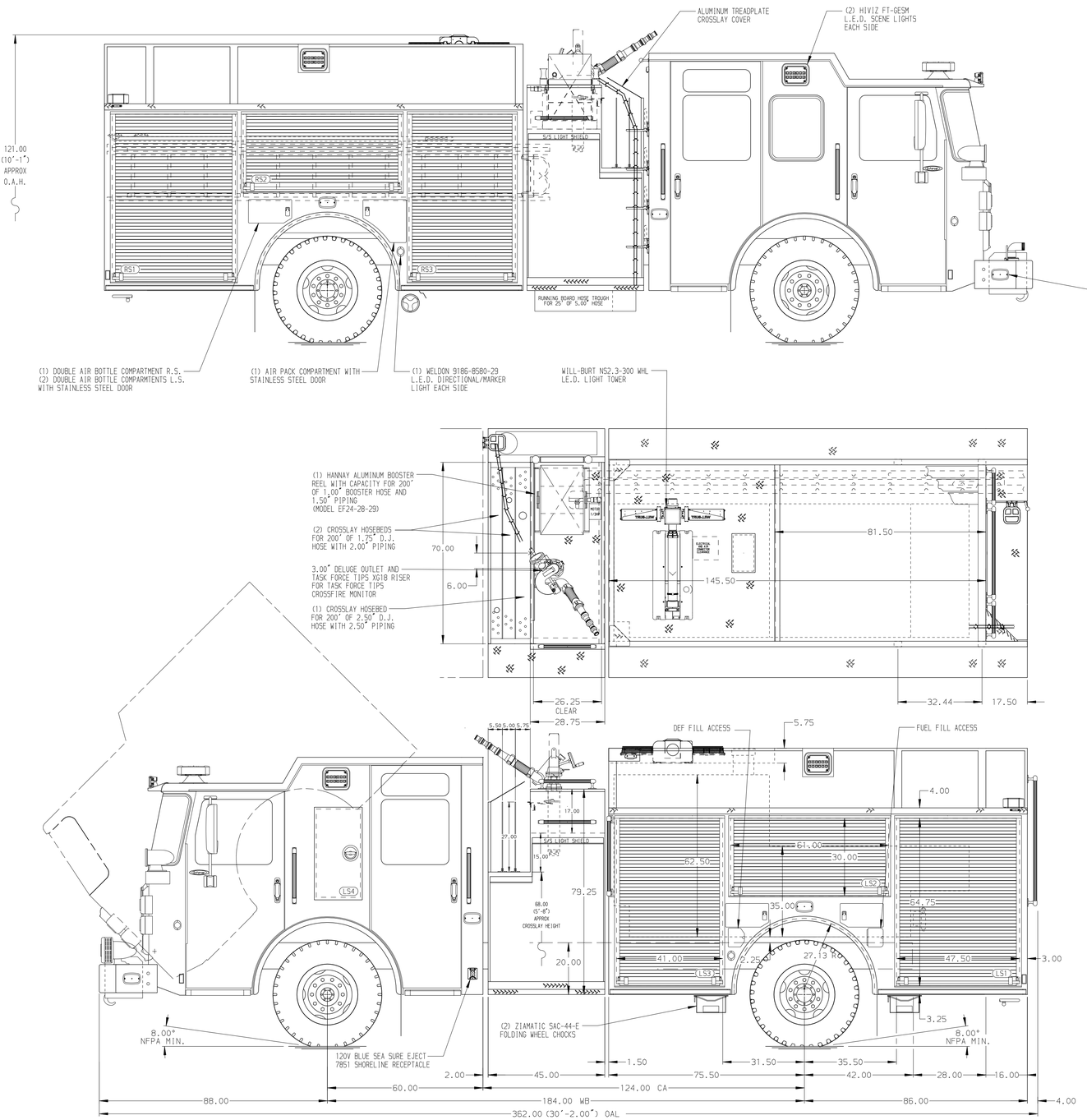

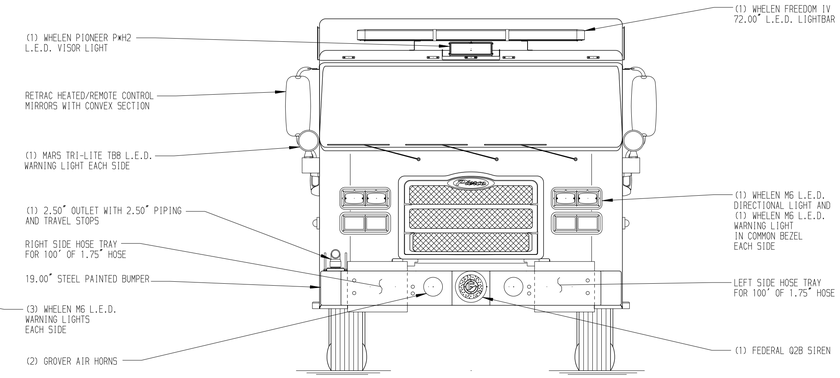

HOSEBED CAPACITIES
1. 1000' OF 5.00" D.J. POLY HOSE
2. 300' OF 2.50" D.J. POLY HOSE
3. 200' OF 2.50" D.J. POLY HOSE

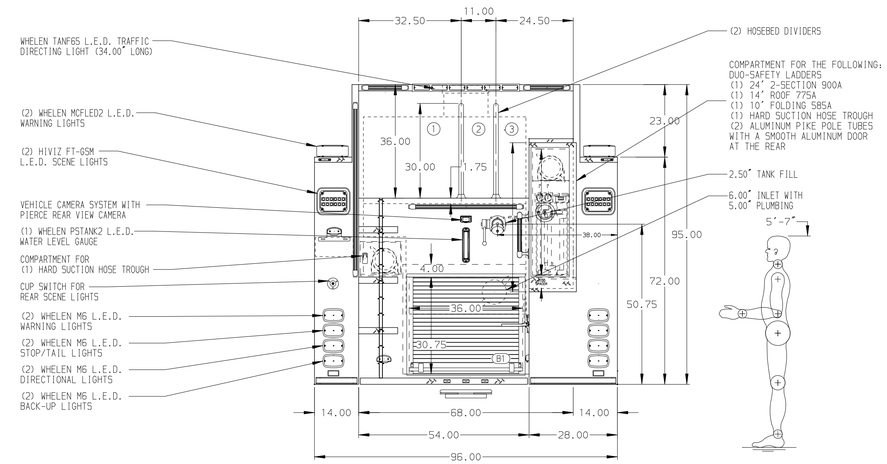

ALUMINUM BODY

SIDE ROLL AND FRONTAL IMPACT PROTECTION

NOTE

DIMENSIONS SHOWN ARE APPROXIMATE AND ARE SUBJECT TO MINOR DEVIATIONS AS MAY OCCUR OR BE NECESSARY IN CONSTRUCTION.
MINOR DETAILS NOT SHOWN.

1. BATTERY CHARGER LOCATED BEHIND DRIVER'S SEAT
2. BATTERY CHARGE INDICATOR LOCATED ON DRIVER'S SEAT RISER
3. ONE FULL WIDTH/DEPTH ADJUSTABLE SHELF IN COMPARTMENTS LS1,LS3,RS1,TWO IN RS3
4. ONE ADJUSTABLE SLIDE-OUT TRAY IN COMPARTMENTS LS1,LS3
5. SWING-OUT TOOL BOARD WITH PEGBOARD PATTERN IN COMPARTMENT RS2
6. ONE VERTICAL PARTITION IN COMPARTMENT LS1
7. WALL MOUNTED 0.19" ALUMINUM PEGBOARD IN COMPARTMENT LS2,LS3
8. ONE WHELEN SA315P SPEAKER MOUNTED BEHIND BUMPER
9. AIR INLET/OUTLET WITH DISCONNECT FITTING ON DRIVER'S SIDE PUMP PANEL
10. 120V DUPLEX RECEPTACLE LOCATED IN COMPARTMENTS LS1,RS1,RS3

REV	DATE	BY	CH
V	09JUL20	BKB	CSH
V	29MAY20	JWO	CSH
V	24MAR20	JWO	KOU

CHASSIS DATA
MAKE: PIERCE
MODEL: ENFORCER

Pierce MANUFACTURING INC.

TITLE: 1500-D-1000P,161",FULL HEIGHT DS AND PS,FDLER PS (3) X-LAYS,DELUGE,BOOSTER REEL,LIGHT TOWER
FOR: ALTAVISTA VOLUNTEER FIRE DEPARTMENT ALTAVISTA, VIRGINIA
DWG NO.: 34952AD

JOB NO.	SCALE	DRAWN BY	CHECKED BY	SHEET SIZE	SHEET NO.
34952	1:24	JWO	KOU	D	1 OF 1
	DATE	12MAR20	18MAR20		

View File Created 30-JUL-2020 09:36:52