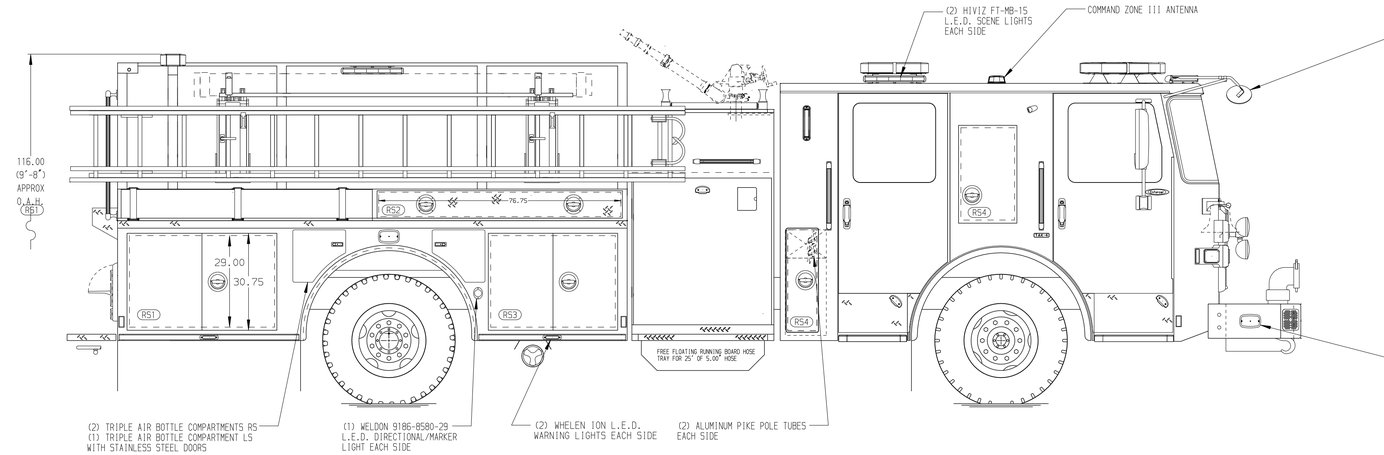

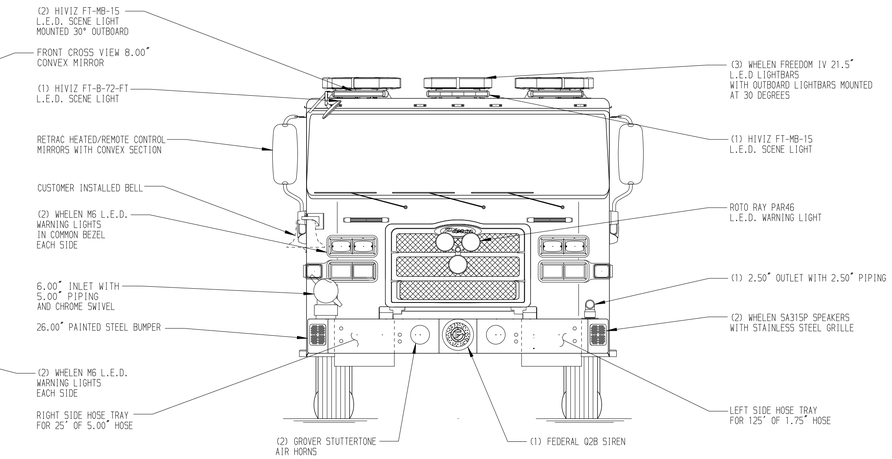

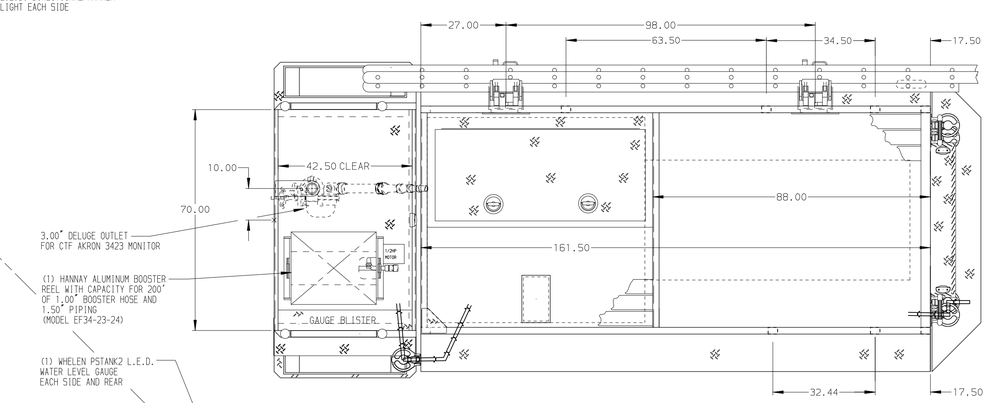

HOSEBED CAPACITIES

1. 250' OF 1.75" TRU-A-TAK HOSE
2. 250' OF 2.50" D.J. POLY HOSE
3. 1250' OF 5.00" D.J. POLY HOSE
4. 400' OF 2.50" D.J. POLY HOSE
5. 250' OF 1.75" TRU-A-TAK HOSE

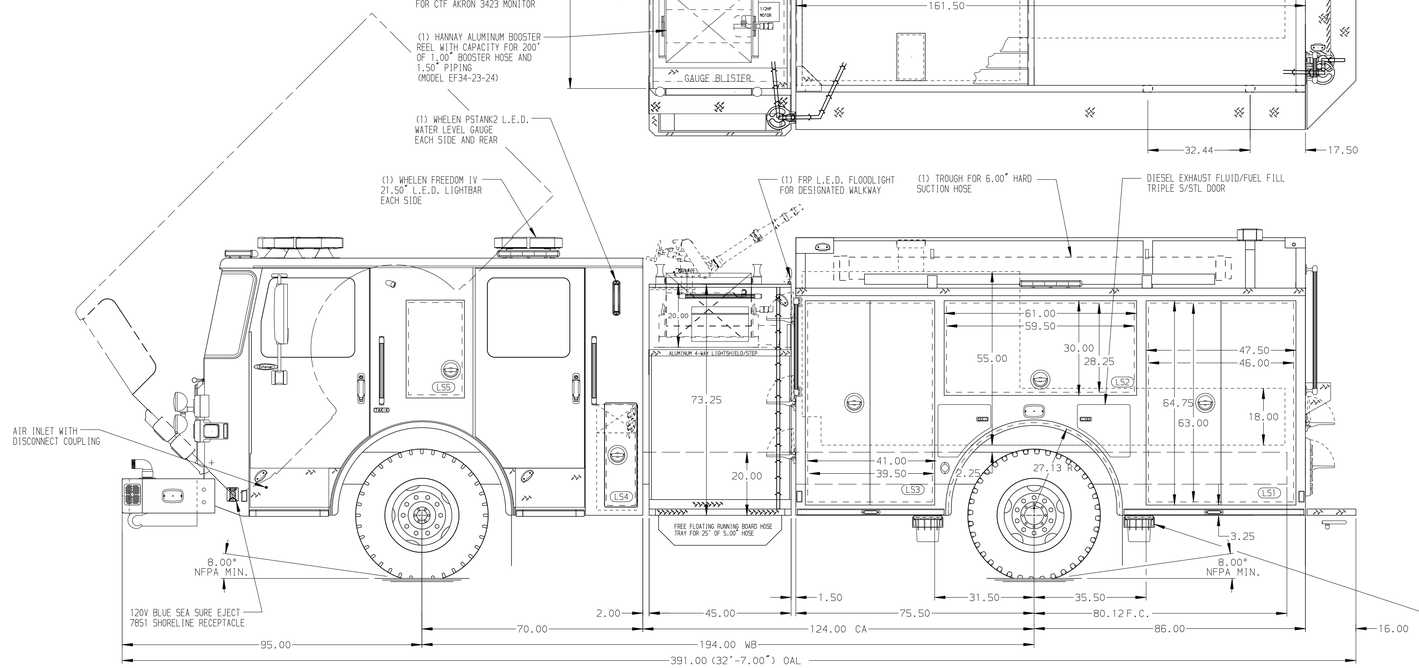

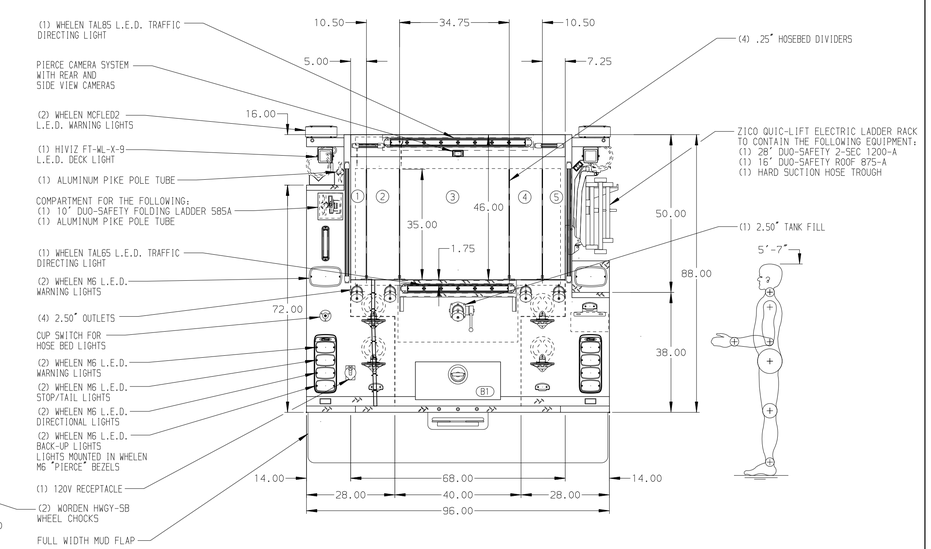

ALUMINUM BODY

SIDE ROLL AND FRONTAL IMPACT PROTECTION

NOTE

DIMENSIONS SHOWN ARE APPROXIMATE AND ARE SUBJECT TO MINOR DEVIATIONS AS MAY OCCUR OR BE NECESSARY IN CONSTRUCTION.
MINOR DETAILS NOT SHOWN.

1. INSTA-CHAIN AUTOMATIC TIRE CHAINS
2. BATTERY CHARGER LOCATED IN COMPARTMENT LS3
3. BATTERY CHARGE INDICATOR LOCATED ON DRIVER'S SEAT RISER
4. DUAL L.E.D. LIGHT STRIPS LOCATED IN HOSE BED
5. ONE FULL WIDTH/DEPTH ADJUSTABLE SHELF IN COMPARTMENTS LS1,LS3,RS1
6. ONE FLOOR MOUNTED SLIDE-OUT TRAY IN COMPARTMENT LS1,LS3
7. ONE SWING-OUT TOOLBOARD LOCATED IN COMPARTMENT LS2
8. PAC TRAC INSTALLED ON THE BACK WALL OF COMPARTMENT LS3

REV	DATE	BY	CH
3	14DEC20	JWO	JGO
2	29OCT20	JWO	JGO
1	17SEP20	JWO	KOU

CHASSIS DATA
MAKE: PIERCE
MODEL: ENFORCER

Pierce MANUFACTURING INC.

TITLE: 2000-D-1000 GAL POLY, 161" BODY
ZICO LADDER RACK, DELUGE, BOOSTER REEL

FOR: LEWISVILLE FIRE DEPARTMENT
LEWISVILLE, NORTH CAROLINA

DWG NO.: 34924AD

JOB NO.	34924
SCALE	1:24
DATE	
DRAWN BY	JWO
	05MAR20
CHECKED BY	EGO
	06MAR20
SHEET SIZE	D
SHEET NO.	1 OF 1

View File Created 14-DEC-2020 10:21:28