PUMPER

BODY
Long Aluminum 2nd Gen Pumper

CHASSIS
Enforcer Chassis

CHASSIS

AXLE, FRONT, CUSTOM
18,000 lb Dana Axle

AXLE, REAR
27,000 lb Dana Axle

ENGINE
450 HP Cummins L9 Engine

TRANSMISSION
Allison 5th Gen, 3000 EVS P

BUMPER
19" Extended Stainless Steel

CAB
7010 Enforcer Cab

BODY

WATER TANK
750 Gallon Poly Water Tank

COMPT, PUMPER, REAR
44.50" FF RollUp Rear Compt

COMPT, PUMPER, LEFT SIDE
161" Lap Full Height & Depth Front & Rear

COMPT, PUMPER, RIGHT SIDE
161" Lap Full Height Front & Rear FDLER

FIRE SUPPRESSION

PUMPHOUSE
45" Control Zone Top Mount

PUMP
1500 GPM Waterous CSU

CROSSLAYS, 1.50"
(1) 2.50" Crosslays Std. Capacity

CROSSLAYS, 2.50"
2.50" Crosslay Not Required

SPEEDLAYS
(2) 1.50" W/Tray Std. Capacity

GENERATOR
Generator Not Required

Foam System
Husky 3 Single Agent Foam System

Foam Cell
20 Gallon Foam Cell, Not Reduced Water

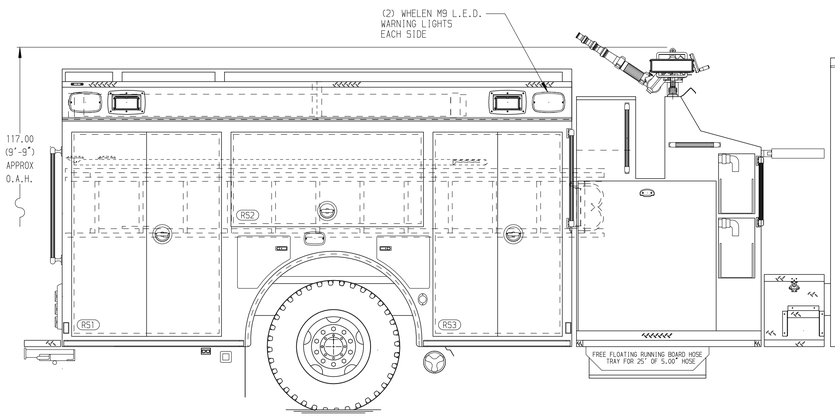

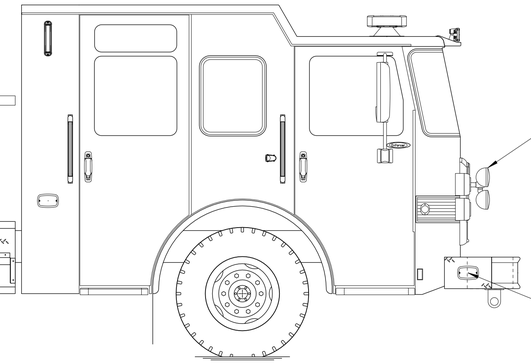

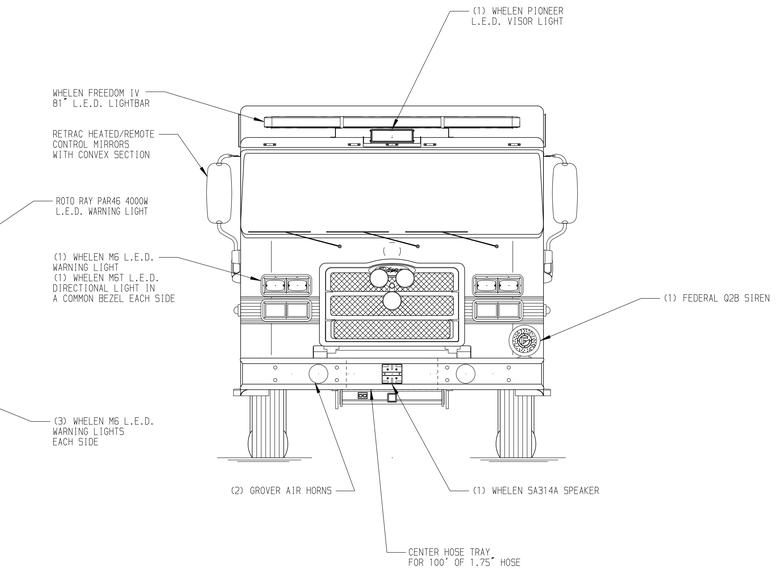

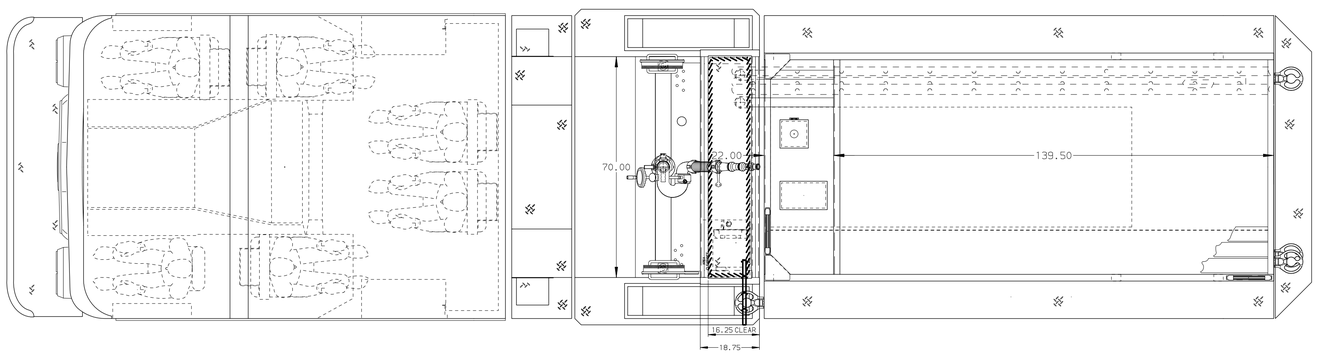

HOSEBED CAPACITY

BED 1
1000' OF 5.00" D.J. POLY HOSE

BED 2
400' OF 2.50" D.J. POLY HOSE

BED 3
150' OF 2.50" D.J. POLY HOSE

BED 4
200' OF 1.75" D.J. POLY HOSE

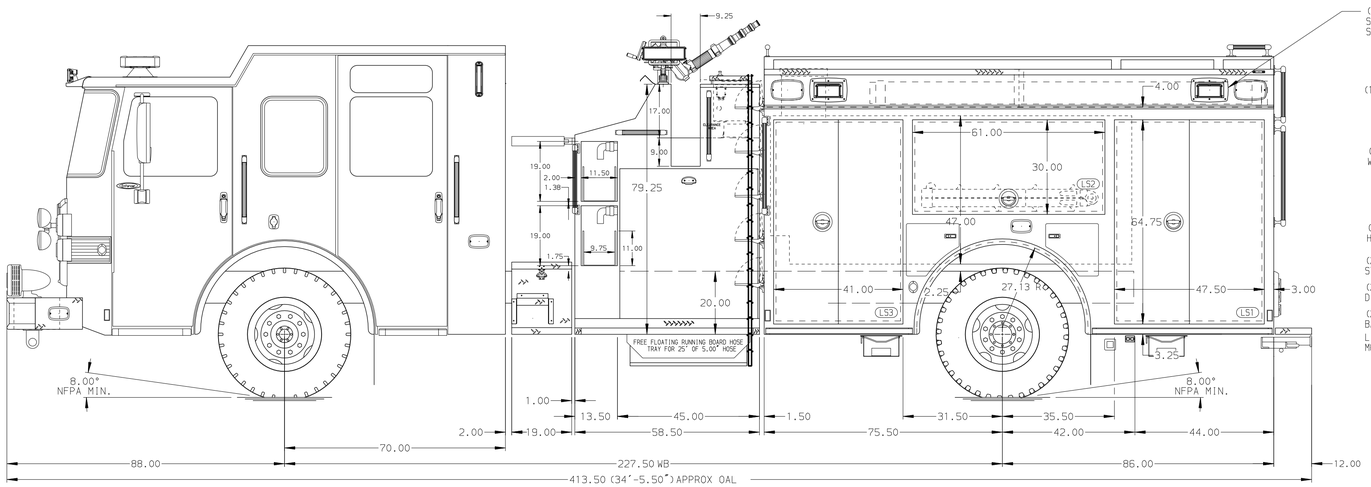

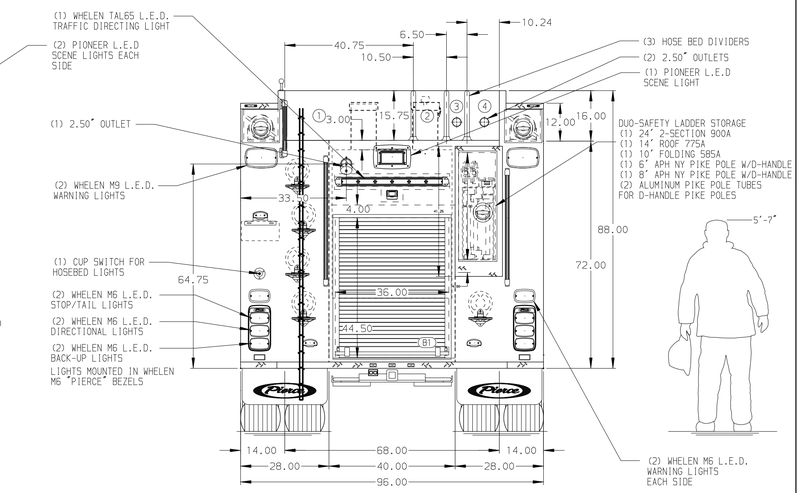

NOTE

DIMENSIONS SHOWN ARE APPROXIMATE AND ARE SUBJECT TO MINOR DEVIATIONS AS MAY OCCUR OR BE NECESSARY IN CONSTRUCTION.
MINOR DETAILS NOT SHOWN.

1. ONE 1.50 OUTLET WITH 2.00 PIPING AND SWIVEL LOCATED IN CENTER BUMPER TRAY
2. SHORELINE RECEPTACLE WITH KUSSMAUL SUPER AUTO-EJECT LOCATED ON DRIVER SIDE OF THE CAB
3. AIR INLET WITH DISCONNECT COUPLING IN THE DRIVER SIDE STEPWELL
4. BATTERY CHARGER LOCATED IN BEHIND DRIVER SEAT
5. BATTERY CHARGE INDICATOR LOCATED ON THE DRIVER SIDE SEAT RISER
6. TWELVE ADJUSTABLE SHELVES IN COMPARTMENTS PER SHOP ORDER
7. TWO FLOOR MOUNTED SLIDE-OUT TRAY IN COMPARTMENT PER SHOP ORDER
8. ONE TILT-SLIDE-OUT TRAYS LOCATED IN COMPARTMENTS PER SHOP ORDER
9. TWO SLIDE-OUT TOOLBOARDS LOCATED IN COMPARTMENTS PER SHOP ORDER
10. ONE DRAWER ASSEMBLEY LOCATED IN COMPARTMENT PER SHOP ORDER
11. ONE VERTICAL PARTITION LOCATED IN COMPARTMENT PER SHOP ORDER

REV	DATE	BY	CH
V	24JUN20	MMF	PJP
V	26MAY20	MMF	PJP
V	14APR20	MMF	PJP

CHASSIS DATA
MAKE: PIERCE
MODEL: ENFORCER

Pierce MANUFACTURING INC.

TITLE	Pierce Pumper Approval Drawing -	JOB NO.	34909
		SCALE	1:24
		DRAWN BY	MMF
		DATE	18MAR20
FOR	Asbury Community Fire Department -	CHECKED BY	NPE
		DATE	20MAR20
DWG NO.	34909AD	SHEET SIZE	D
		SHEET NO.	1 OF 1

View File Created 20-JUL-2020 09:42:40