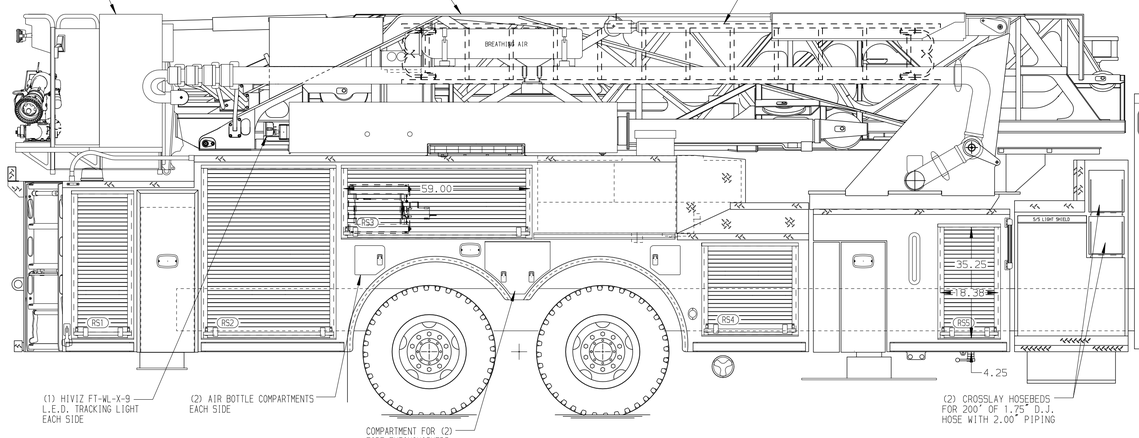

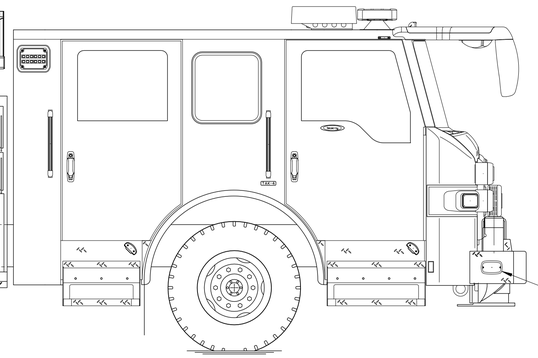

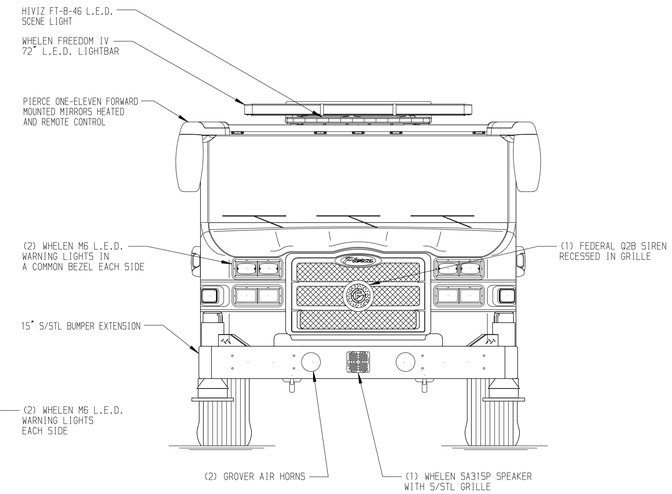

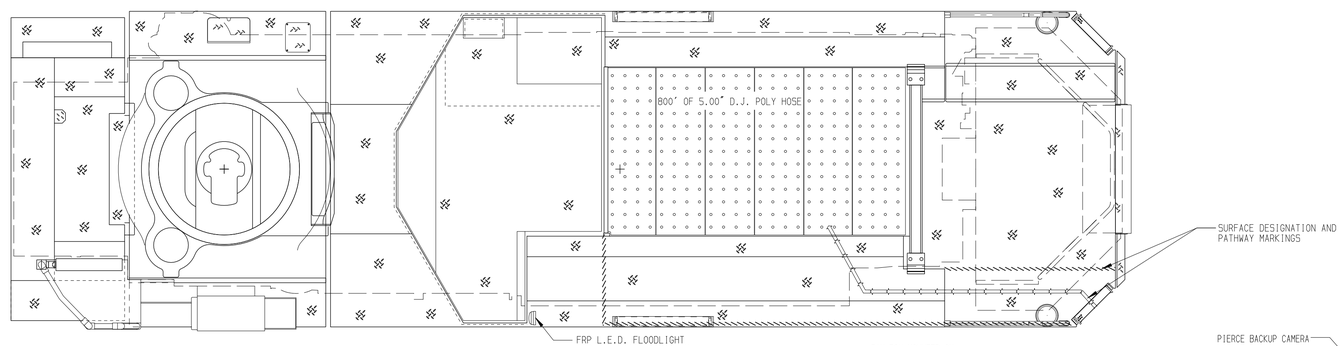

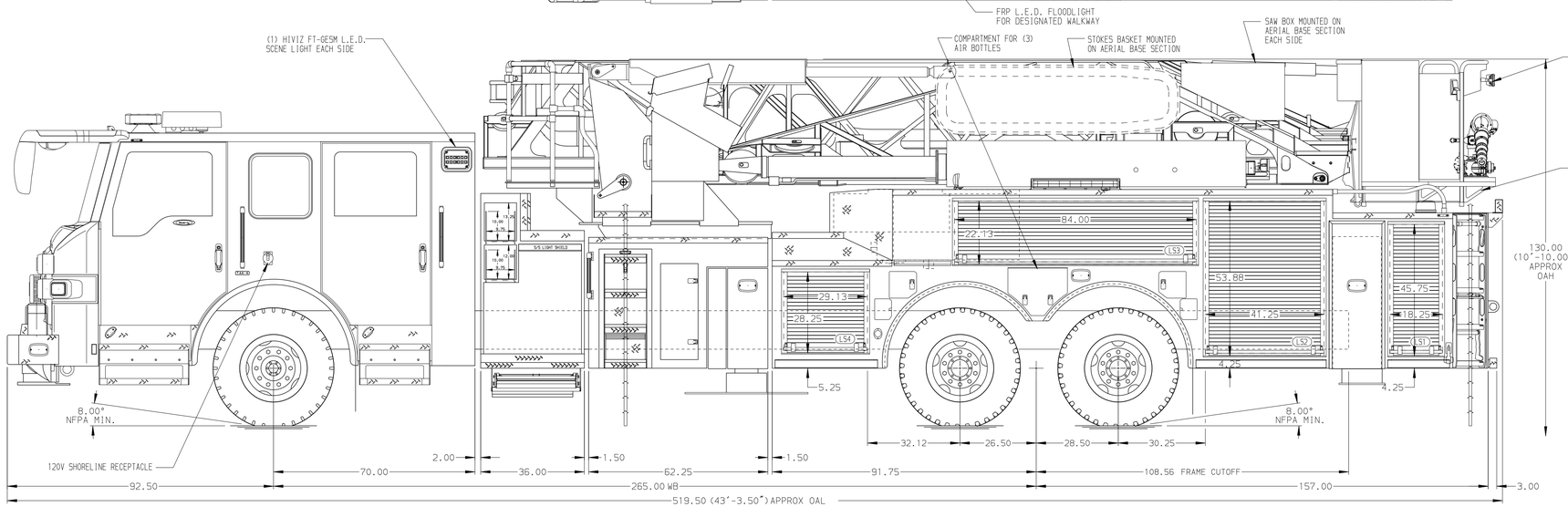

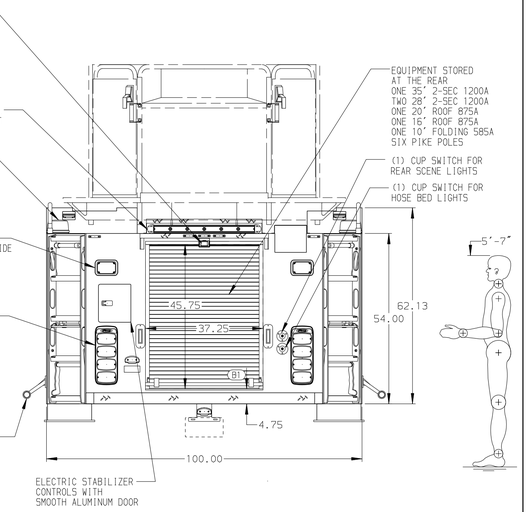

Pierce MANUFACTURING INC.

JOB NO.	34895
SCALE	1:24
DATE	
TITLE	100' ASCENDANT AERIAL TOWER AND BODY ASSEMBLY 300 GALLON WATER TANK
FOR	CITY OF DELANO DELANO, MN
DRAWN BY	JGA
DATE	08APR20
CHECKED BY	NDA
DATE	10APR20
SHEET SIZE	D
SHEET NO.	1 OF 1
DWG NO.	34895AD

NOTE

DIMENSIONS SHOWN ARE APPROXIMATE AND ARE SUBJECT TO MINOR DEVIATIONS AS MAY OCCUR OR BE NECESSARY IN CONSTRUCTION.
MINOR DETAILS NOT SHOWN.

1. BATTERY CHARGER/COMPRESSOR LOCATED IN COMPARTMENT PER SHOP ORDER
2. BATTERY CHARGE INDICATOR LOCATED NEAR DRIVER'S SEAT RISER WITH BRACKET
3. L.E.D. LIGHT STRIPS LOCATED IN THE HOSE BED PER SHOP ORDER
4. ONE ADJUSTABLE FULL WIDTH/FULL DEPTH SHELF IN COMPARTMENT PER SHOP ORDER
5. CIRCUIT BREAKER PANEL IN COMPARTMENT PER SHOP ORDER
6. 120V 6-PLACE RECEPTACLE STRIP LOCATED PER SHOP ORDER
7. ONE 120V RECEPTACLE LOCATED PER SHOP ORDER
8. 3-WAY INTERCOM SYSTEM BETWEEN AERIAL TIP, PUMP PANEL AND TURNTABLE
9. 3-IN-1 LYFE BRACKETS ON BASKET
10. HARRISON 6KW MID HYDRAULIC GENERATOR LOCATED PER SHOP ORDER
11. ONE HANNAY ELECTRIC REWIND CORD REEL MODEL ELFCR1622-14-16 WITH 200' OF 10/3 CABLE IN COMPARTMENT PER SHOP ORDER
12. ONE SLIDE-OUT TOOLBOARD WITH 14.25 WIDE TRAY AND TOOL MOUNTING IN COMPARTMENT PER SHOP ORDER
13. TWO WORDEN HWGY-SB WHEEL CHOCKS WITH STORAGE BOX LOCATED IN COMPARTMENT PER SHOP ORDER

REV	DATE	BY	CH
3	31JUL20	JGA	DTS
2	11JUNE20	JGA	GKH
1	14APR20	JGA	NDA

CHASSIS DATA
MAKE: PIERCE
MODEL: VELOCITY

View File Created 03-AUG-2020 07:50:14