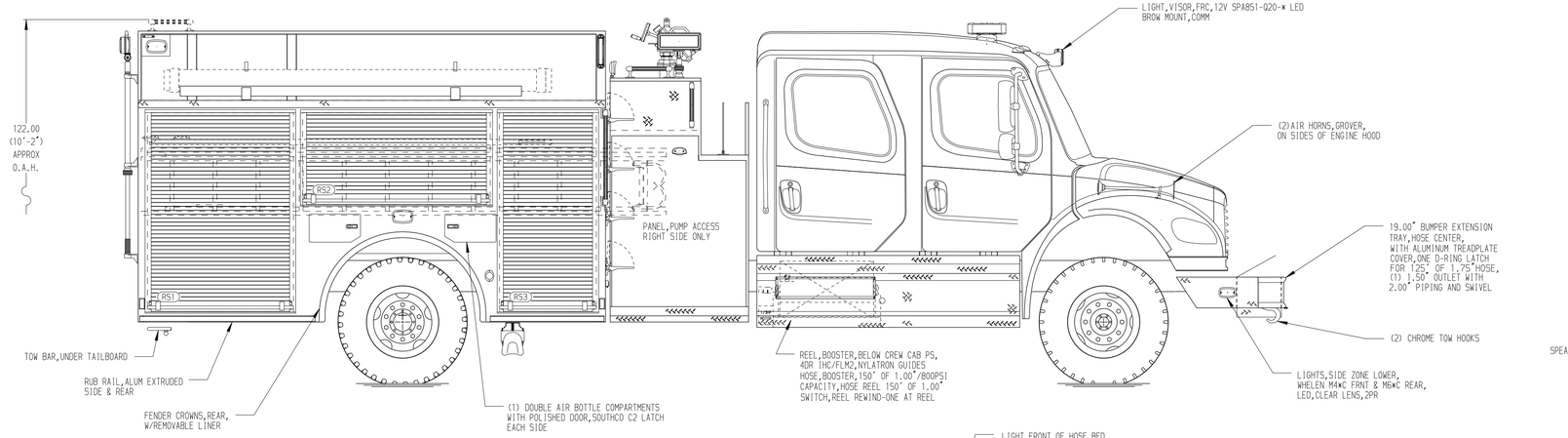

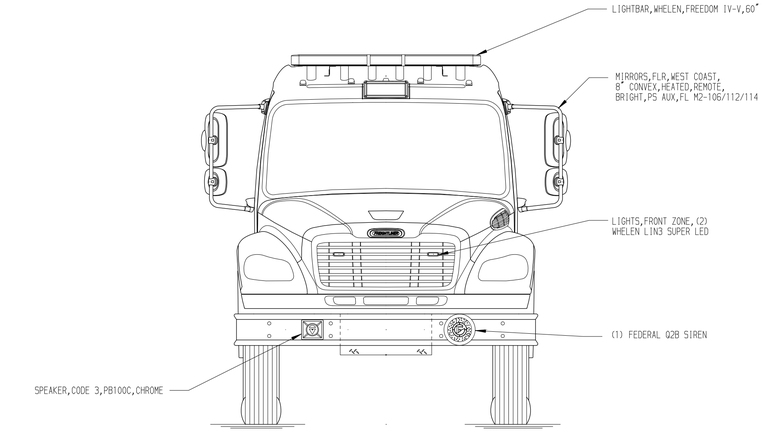

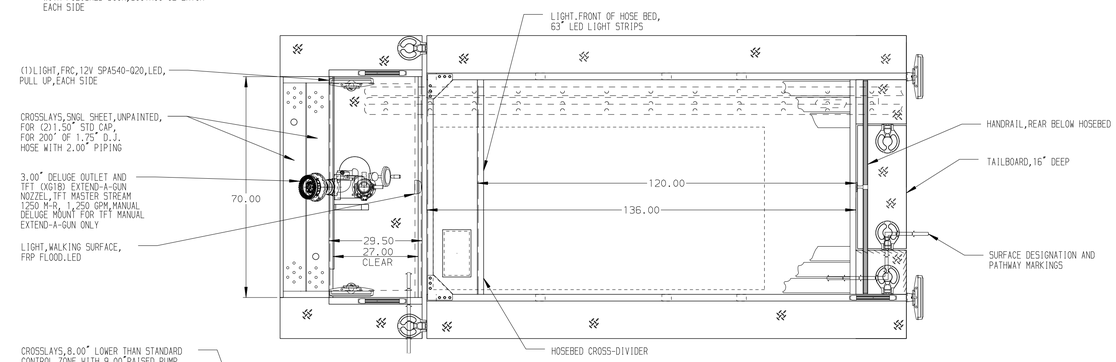

HOSEBED CAPACITIES

1. 1000' OF 5.00" DJP HOSE
2. 1000' OF 3.00" DJP HOSE

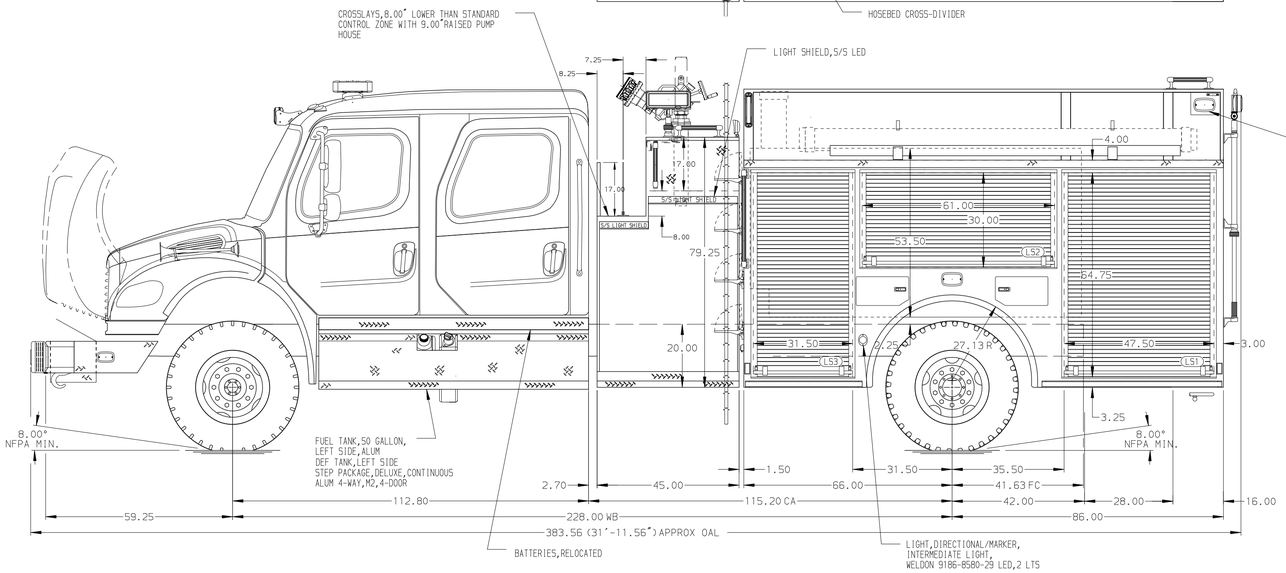

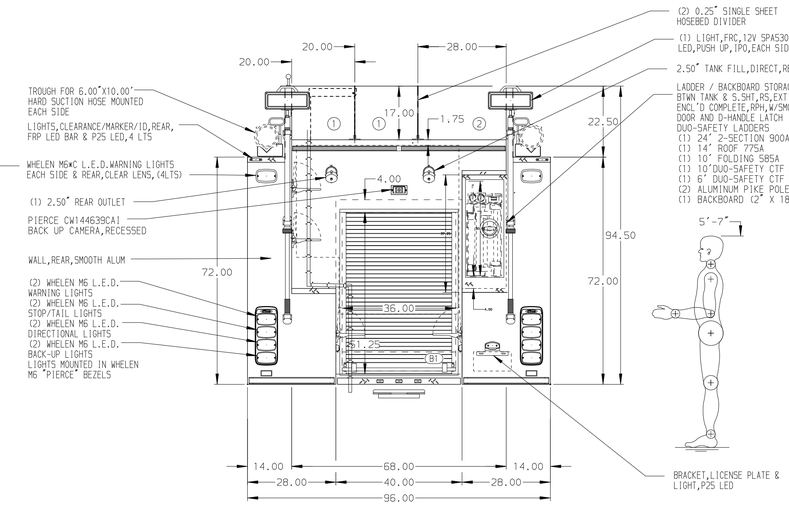

ALUMINUM BODY

NOTE

DIMENSIONS SHOWN ARE APPROXIMATE AND ARE SUBJECT TO MINOR DEVIATIONS AS MAY OCCUR OR BE NECESSARY IN CONSTRUCTION.
MINOR DETAILS NOT SHOWN.

REV	DATE	BY	CH
3	23OCT20	RHU	DDR
2	17SEP20	JLA	GSC
1	19JUN20	CRH	RWI

CHASSIS DATA
MAKE: FL
MODEL: M2-106

Pierce MANUFACTURING INC.

TITLE: 1500-D-1000P,152"BODY,LS&RS FULL HEIGHT FRT&RR FDLER 45"SIDE CONTROL,(2)1.5"CROSSLAYS

FOR: FAIRVIEW FIRE DEPARTMENT
FAIRVIEW, OKLAHOMA

DWG NO.: 34861AD

JOB NO.	34861
SCALE	1:24
DATE	01JUN20
DRAWN BY	JLA
CHECKED BY	RWI
CHECKED BY	2JUN20
SHEET SIZE	D
SHEET NO.	1 OF 1

View File Created 23-OCT-2020 11:50:03