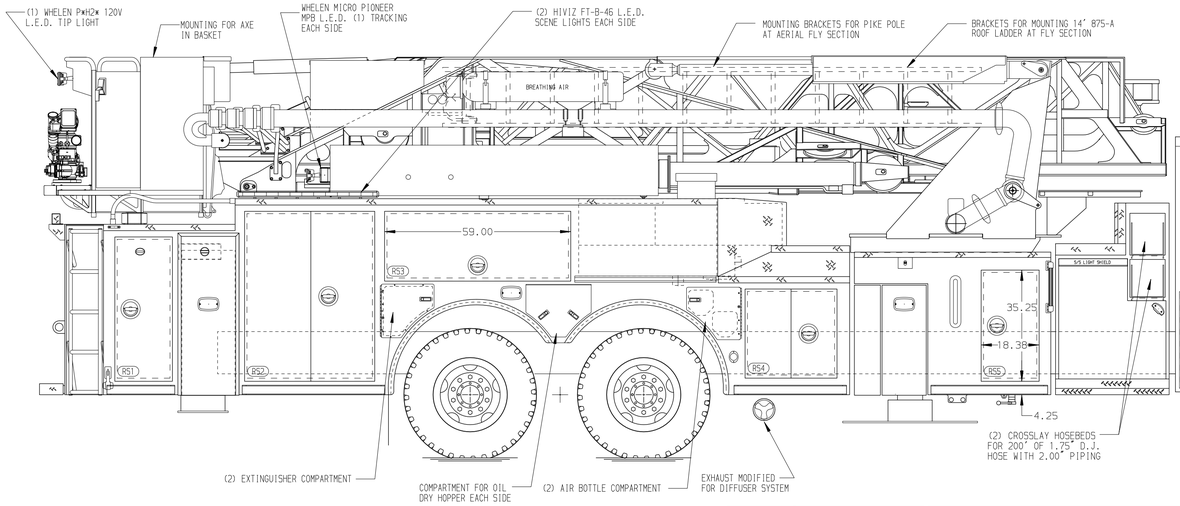

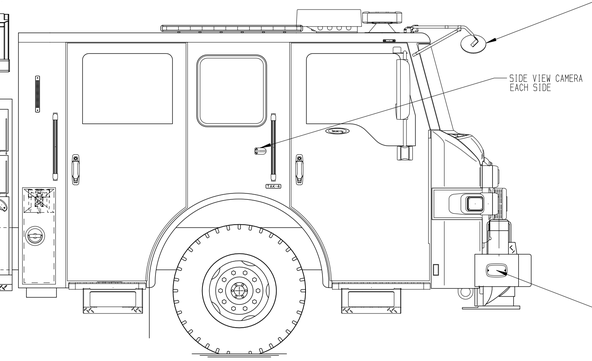

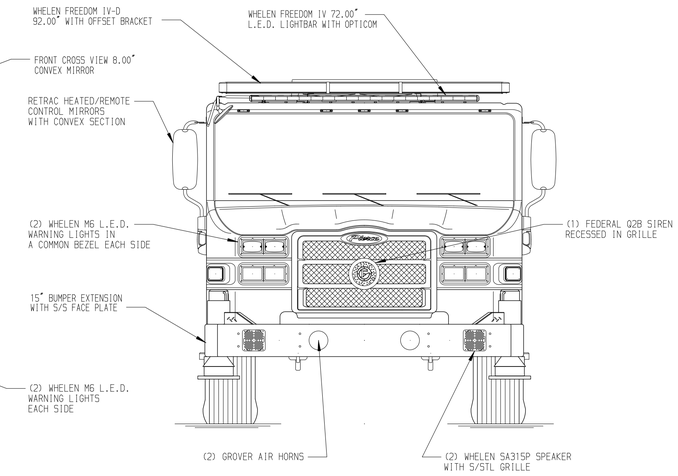

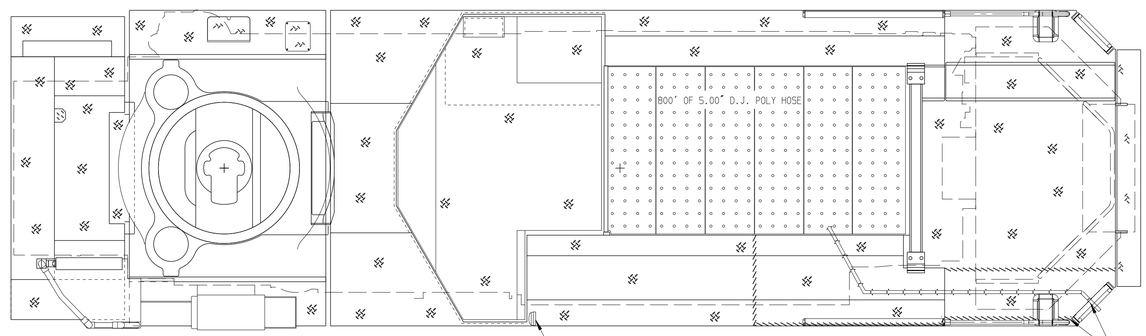

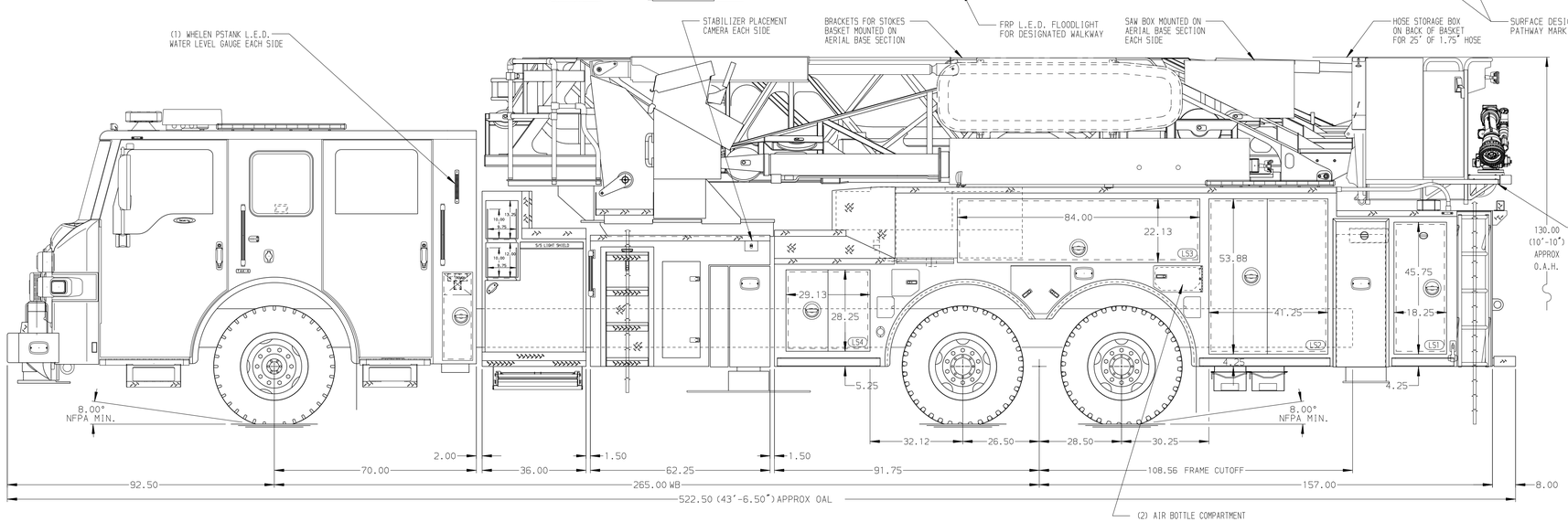

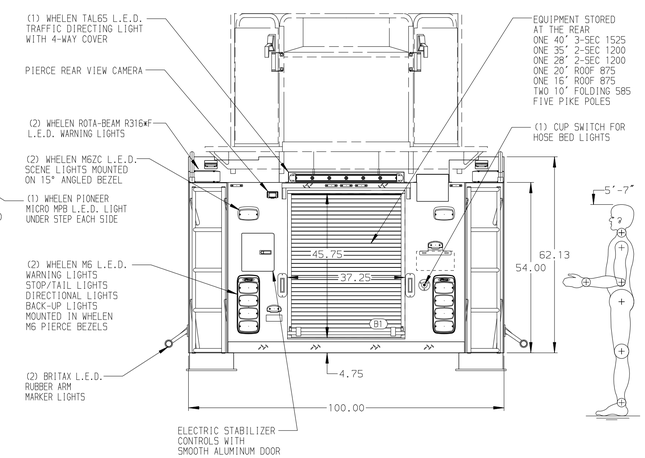

ALUMINUM BODY

SIDE ROLL AND FRONTAL IMPACT PROTECTION

NOTE

DIMENSIONS SHOWN ARE APPROXIMATE AND ARE SUBJECT TO MINOR DEVIATIONS AS MAY OCCUR OR BE NECESSARY IN CONSTRUCTION.
MINOR DETAILS NOT SHOWN.

1. SHORELINE RECEPTACLE WITH KUSSMAUL SUPER AUTO-EJECT LOCATED ON DRIVER SIDE OF THE CAB
2. AIR INLET WITH DISCONNECT COUPLING IN THE DRIVER SIDE STEPWELL
3. BATTERY CHARGER LOCATED IN CAB PER SHOP ORDER
4. BATTERY CHARGE INDICATOR LOCATED ON DRIVERS SIDE OF CAB
5. FOUR ADJUSTABLE SHELVES IN COMPARTMENTS PER SHOP ORDER
6. NON-RAISED AERIAL PEDESTAL
7. 3-in-1 LYFECOMBO BRACKETS AT AERIAL BASKET
8. ONE AJUSTABLE SPECIAL HEIGHT SHELVE IN COMPARTMENT PER SHOP ORDER
9. TWO FLOOR MOUNTED SLIDE-OUT TRAY IN COMPARTMENT PER SHOP ORDER
10. ONE TOOL BOARD ADDED TO SLIDE-OUT TRAY IN COMPARTMENT PER SHOP ORDER
11. THREE PAC TRAC ON BACK WALL OF COMPARTMENT PER SHOP ORDER
12. TWO SLIDE-OUT TOOL BOARDS IN COMPARTMENTS PER SHOP ORDER
13. ONE VERTICAL PARTITION IN COMPARTMENT PER SHOP ORDER
14. XANTERX PROSINE INVERTER IN COMPARTMENT PER SHOP ODER
15. FOUR 120V DUPELEX RECEPTACLES IN CAB PER SHOP ORDER
16. ONE 120V 6-PLACE RECEPTACLE IN CAB PER SHOP ORDER
17. RUNG LIGHTING ON DEVICE
18. FIRE RESEARCH 3-WAY INTERCOM SYSTEM BETWEEN AERIAL TIP,PUMP PANEL & TURNTABLE
19. HOSE STORAGE RACK FOR ROLLED HOSE IN COMPARTMENT PER SHOP ORDER

REV	DATE	BY	CH
1	15JUN20	LWE	PJP
2	06MAY20	LWE	PJP

CHASSIS DATA
MAKE: PIERCE
MODEL: VELOCITY

Pierce MANUFACTURING INC.

TITLE: 100' ASCENDANT AERIAL TOWER AND BODY ASSEMBLY
300 GALLON WATER TANK

FOR: COUNCIL BLUFFS
COUNCIL BLUFFS, IA

DWG NO.: 34848AD

JOB NO.	34848
SCALE	1:24
DATE	
DRAWN BY	LWE 03MAR20
CHECKED BY	NDA 6MAR20
SHEET SIZE	D
SHEET NO.	1 OF 1

View File Created 16-JUN-2020 07:31:30